Fisher® ET and EAT easy-e™ Valves CL125 through CL600

Contents

Introduction 1
Scope of Manual 1
Description 2
Specifications 3
Installation 3
Maintenance 4
Packing Lubrication 5
Packing Maintenance 5
Replacing Packing 6
Trim Maintenance 11
Disassembly 11
Lapping Metal Seats 12
Valve Plug Maintenance 13
Assembly 15
ENVIRO-SEAL™ Bellows Seal Bonnet 16
Replacing a Plain or Extension Bonnet with an ENVIRO-SEAL Bellows Seal Bonnet (Stem/Bellows Assembly) 16
Replacement of an Installed ENVIRO-SEAL Bellows Seal Bonnet (Stem/Bellows Assembly) 18
Purging the ENVIRO-SEAL Bellows Seal Bonnet 20
Parts Ordering 21
Parts Kits 21
Parts List 24

Figure 1. Fisher ET Control Valve with 667 Actuator

W1916-3

Introduction

Scope of Manual

This instruction manual includes installation, maintenance, and parts information for NPS 1 through 8 Fisher ET valves, and NPS 1 through 6 EAT valves, through CL600 ratings. Refer to separate manuals for instructions covering the actuator and accessories.

Do not install, operate, or maintain ET valves without being fully trained and qualified in valve, actuator, and accessory installation, operation, and maintenance. To avoid personal injury or property damage, it is important to carefully read, understand, and follow all the contents of this manual, including all safety cautions and warnings. If you have any questions about these instructions, contact your Emerson Process Management sales office before proceeding.

Table 1. Specifications

End Connection Styles

Cast Iron Valves
Flanged: CL125 flat-face or 250 raised-face flanges per ASME B16.1
Steel and Stainless Steel Valves
Flanged: CL150, 300, and 600 raised-face or ring-type joint flanges per ASME B16.5
Screwed or Socket Welding: All available ASME B16.11 schedules that are consistent with CL600 per ASME B16.34
Buttwelding: Consistent with ASME B16.25

Maximum Inlet Pressure(1)

Cast Iron Valves
Flanged: Consistent with CL125B or 250B pressure-temperature ratings per ASME B16.1
Steel and Stainless Steel Valves
Flanged: Consistent with CL150, 300, and 600(2) pressure-temperature ratings per ASME B16.34
Screwed or Welding: Consistent with CL600 pressure-temperature ratings per ASME B16.34

Shutoff Classifications

See table 2

Flow Characteristics

Linear (all cages), quick-opening (all except Whisper Trim™, WhisperFlo™, and Cavitrol™ cages), or equal percentage (all except Whisper Trim, WhisperFlo, and Cavitrol cages)

Flow Directions

Linear, Quick Opening, or Equal Percentage Cage: Normally down
Whisper Trim and WhisperFlo Cages: Always up
Cavitrol Cage: Always down

Approximate Weights

VALVE SIZE, NPS	WEIGHT	
	kg	Pounds
1 and 1-1/4	14	30
1-1/2	20	45
2	39	67
2-1/2	45	100
3	54	125
4	77	170
6	159	350
8	408	900

1. The pressure/temperature limits in this manual and any applicable standard or code limitation for valve should not be exceeded.
2. Certain bonnet bolting material selections may require a CL600 easy-e valve assembly to be derated. Contact your Emerson Process Management sales office.

Table 2. Available Shutoff Classifications per ANSI/FCI 70-2 and IEC 60534-4

Valve	Seating	Shutoff Class
All except those with Cavitrol III cages	PTFE (standard)	V - air test
		V - water test (optional)
	Metal	IV
		V (optional)(2)
ET with Cavitrol III one-stage cage	Metal	IV (standard)
		V (optional)
ET with Cavitrol III two-stage cages	Metal	V
ET w/PEEK Anti-Extrusion Rings	Metal	V to 316°C (600°F)
ET w/ 3.4375 to 7-inch port	Soft or Metal	VI
ET and EAT w/ TSO (Tight Shutoff Trim)	Replaceable, protected soft seat	TSO(1)

1. This is a special non-ANSI/FCI leakage class.
2. Class V shutoff requires spring-loaded seal ring, radiused-seat plug, and wide-bevel seat ring (not available with 8-inch port, quick-opening cage). Not available with trims 4, 29, and 85.

Description

These single-port valves have cage guiding, quick-change trim, and balanced push-down-to-close valve plug action. Valve configurations are as follows:

ET--Globe-style valve (figure 1) with metal-to-PTFE seating (standard for all except Cavitrol III cages) for stringent shutoff requirements, or metal-to-metal seating (standard for Cavitrol III cages, optional for all others) for higher temperatures.

EAT--Angle version of ET, used to facilitate piping or in applications which require a self-draining valve.

Specifications

Typical specifications for these valves are shown in table 1.

Installation

⚠ WARNING

Always wear protective gloves, clothing, and eyewear when performing any installation operations to avoid personal injury.

Personal injury or equipment damage caused by sudden release of pressure may result if the valve assembly is installed where service conditions could exceed the limits given in table 1 or on the appropriate nameplates. To avoid such injury or damage, provide a relief valve for over-pressure protection as required by government or accepted industry codes and good engineering practices.

Check with your process or safety engineer for any additional measures that must be taken to protect against process media.

If installing into an existing application, also refer to the WARNING at the beginning of the Maintenance section in this instruction manual.

CAUTION

When ordered, the valve configuration and construction materials were selected to meet particular pressure, temperature, pressure drop, and controlled fluid conditions. Responsibility for the safety of process media and compatibility of valve materials with process media rests solely with the purchaser and end-user. Since some valve body/trim material combinations are limited in their pressure drop and temperature ranges, do not apply any other conditions to the valve without first contacting your Emerson Process Management sales office.

Before installing the valve, inspect the valve and pipelines for any damage and any foreign material which may cause product damage.

1. Before installing the valve, inspect the valve and associated equipment for any damage and any foreign material.
2. Make certain the valve body interior is clean, that pipelines are free of foreign material, and that the valve is oriented so that pipeline flow is in the same direction as the arrow on the side of the valve.
3. The control valve assembly may be installed in any orientation unless limited by seismic criteria. However, the normal method is with the actuator vertical above the valve. Other positions may result in uneven valve plug and cage wear, and improper operation. With some valves, the actuator may also need to be supported when it is not vertical. For more information, consult your Emerson Process Management sales office.
4. Use accepted piping and welding practices when installing the valve in the line. For flanged valves, use a suitable gasket between the valve and pipeline flanges.

CAUTION

Depending on valve body materials used, post weld heat treating may be required. If so, damage to internal elastomeric and plastic parts, as well as internal metal parts is possible. Shrink-fit pieces and threaded connections may also loosen. In

general, if post weld heat treating is to be performed, all trim parts should be removed. Contact your Emerson Process Management sales office for additional information.

5. With a leak-off bonnet construction, remove the pipe plugs (keys 14 and 16, figure 14) to hook up the leak-off piping. If continuous operation is required during inspection or maintenance, install a three-valve bypass around the control valve assembly.
6. If the actuator and valve are shipped separately, refer to the actuator mounting procedure in the appropriate actuator instruction manual.

⚠ WARNING

Personal injury could result from packing leakage. Valve packing was tightened prior to shipment; however, the packing might require some readjustment to meet specific service conditions. Check with your process or safety engineer for any additional measures that must be taken to protect against process media.

Valves with ENVIRO-SEAL live-loaded packing or HIGH-SEAL live-loaded packing will not require this initial readjustment. See the Fisher instruction manuals, ENVIRO-SEAL Packing System for Sliding-Stem Valves or HIGH-SEAL Live-Loaded Packing System (as appropriate), for packing instructions. If you wish to convert your present packing arrangement to ENVIRO-SEAL packing, refer to the retrofit kits listed in the Parts Kits section.

Maintenance

Valve parts are subject to normal wear and must be inspected and replaced as necessary. Inspection and maintenance frequency depends on the severity of service conditions. This section includes instructions for packing lubrication, packing maintenance, trim maintenance, and ENVIRO-SEAL bellows seal bonnet replacement. All maintenance operations may be performed with the valve in the line.

⚠ WARNING

Avoid personal injury or property damage from sudden release of process pressure or bursting of parts. Before performing any maintenance operations:

- **Do not remove the actuator from the valve while the valve is still pressurized.**
- **Always wear protective gloves, clothing, and eyewear when performing any maintenance operations to avoid personal injury.**
- **Disconnect any operating lines providing air pressure, electric power, or a control signal to the actuator. Be sure the actuator cannot suddenly open or close the valve.**
- **Use bypass valves or completely shut off the process to isolate the valve from process pressure. Relieve process pressure from both sides of the valve. Drain the process media from both sides of the valve.**
- **Vent the pneumatic actuator loading pressure and relieve any actuator spring precompression.**
- **Use lock-out procedures to be sure that the above measures stay in effect while you work on the equipment.**
- **The valve packing box may contain process fluids that are pressurized, *even when the valve has been removed from the pipeline.* Process fluids may spray out under pressure when removing the packing hardware or packing rings, or when loosening the packing box pipe plug.**
- **Check with your process or safety engineer for any additional measures that must be taken to protect against process media.**

CAUTION

Follow instructions carefully to avoid damaging the product surfaces, which could result in damage to the product.

Note

Whenever a gasket seal is disturbed by removing or shifting gasketed parts, install a new gasket during reassembly. This ensures a good gasket seal because the used gasket may not seal properly.

Packing Lubrication

Note

ENVIRO-SEAL and HIGH-SEAL packing do not require lubrication.

⚠ WARNING

To avoid personal injury or property damage resulting from fire or explosion, do not lubricate packing used in oxygen service or in processes with temperatures over 260°C (500°F).

If a lubricator or lubricator/isolating valve (figure 2) is provided for PTFE/composition or other packings that require lubrication, it will be installed in place of the pipe plug (key 14, figure 14). Use a good quality silicon-base lubricant. Do not lubricate packing used in oxygen service or in processes with temperatures over 260°C (500°F). To operate the lubricator, simply turn the cap screw clockwise to force the lubricant into the packing box. The lubricator/isolating valve operates the same way except open the isolating valve before turning the cap screw and then close the isolating valve after lubrication is completed.

Packing Maintenance

Note

For valves with ENVIRO-SEAL packing, see the Fisher instruction manual, ENVIRO-SEAL Packing System for Sliding-Stem Valves, D101642X012, for packing instructions.

For valves with HIGH-SEAL packing, see the Fisher instruction manual, HIGH-SEAL Live-Loaded Packing System, D101453X012, for packing instructions.

Key numbers refer to figure 3 for PTFE V-ring packing and to figure 4 for PTFE/composition packing, unless otherwise indicated.

For spring-loaded single PTFE V-ring packing, the spring (key 8) maintains a sealing force on the packing. If leakage is noted around the packing follower (key 13), check to be sure the shoulder on the packing follower is touching the

bonnet. If the shoulder is not touching the bonnet, tighten the packing flange nuts (key 5, figure 14) until the shoulder is against the bonnet. If leakage cannot be stopped in this manner, proceed to the Replacing Packing procedure.

Figure 2. Lubricator and Lubricator/Isolating Valve (Optional)

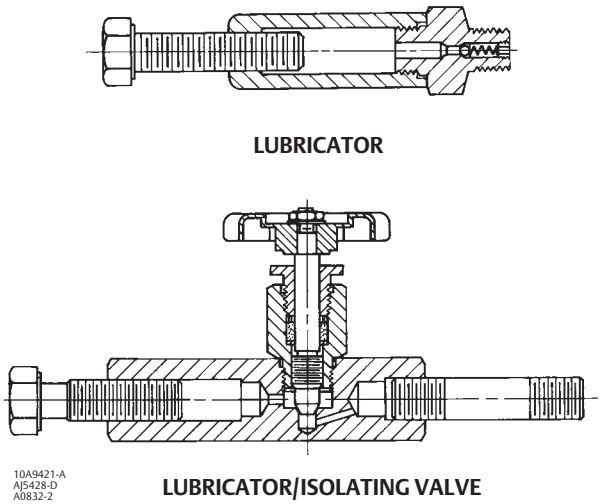

If there is undesirable packing leakage with other than spring-loaded packing, first try to limit the leakage and establish a stem seal by tightening the packing flange nuts.

If the packing is relatively new and tight on the stem, and if tightening the packing flange nuts does not stop the leakage, the valve stem may be worn or nicked so that a seal cannot be made. The surface finish of a new valve stem is critical for making a good packing seal. If the leakage comes from the outside diameter of the packing, the leakage may be caused by nicks or scratches around the packing box wall. If performing any of the following procedures, inspect the valve stem and packing box wall for nicks and scratches.

Replacing Packing

⚠ WARNING

Refer to the WARNING at the beginning of the Maintenance section in this instruction manual.

1. Isolate the control valve from the line pressure, release pressure from both sides of the valve, and drain the process media from both sides of the valve. If using a power actuator, also shut off all pressure lines to the power actuator, and release all pressure from the actuator. Use lock-out procedures to be sure that the above measures stay in effect while you work on the equipment.
2. Disconnect the operating lines from the actuator and any leak-off piping from the bonnet. Disconnect the stem connector, then remove the actuator from the valve by unscrewing the yoke locknut (key 15, figure 14) or the hex nuts (key 26, figure 14).
3. Loosen the packing flange nuts (key 5, figure 14) so that the packing is not tight on the valve stem. Remove any travel indicator parts and stem locknuts from the valve stem threads.

⚠ WARNING

To avoid personal injury or property damage caused by uncontrolled movement of the bonnet, loosen the bonnet by following the instructions in the next step. Do not remove a stuck bonnet by pulling on it with equipment that can stretch or store energy in any other manner. The sudden release of stored energy can cause uncontrolled movement of the bonnet.

Figure 3. PTFE V-Ring Packing Arrangements for Plain and Extension Bonnets

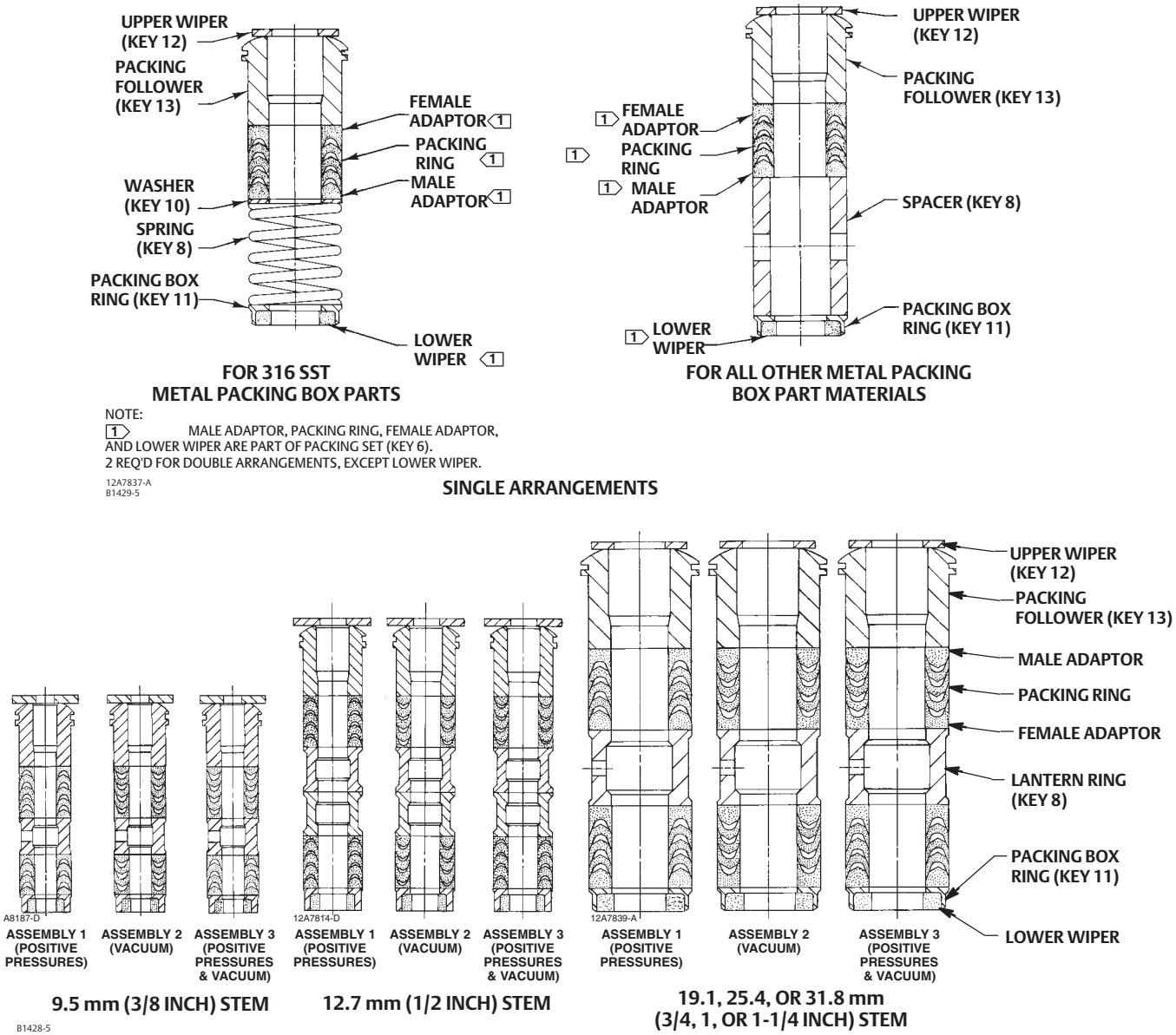

Figure 4. Detail of PTFE/Composition Packing Arrangements for Plain and Extension Bonnets

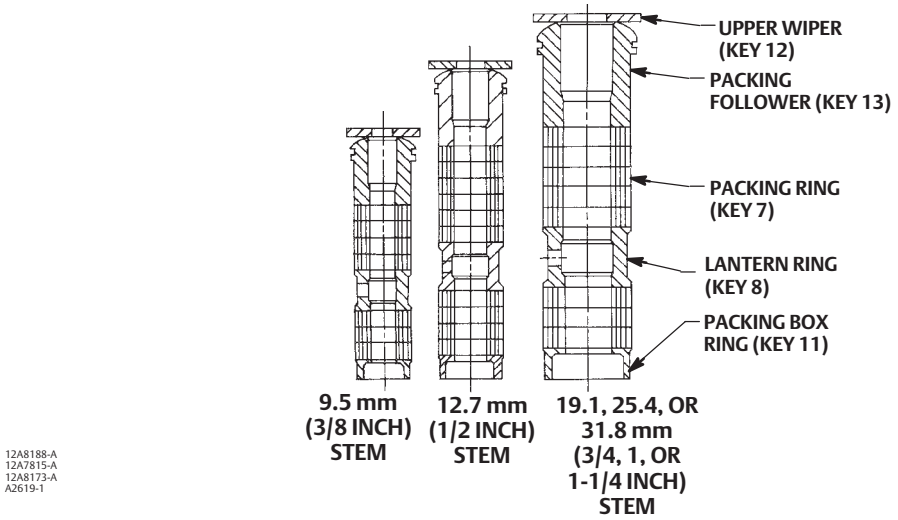

Table 3. Body-to-Bonnet Bolt Torque Guidelines

VALVE SIZE, NPS		BOLT TORQUES(1)			
ET	EAT	SA193-B7, SA193-B8M(3, 4)		SA193-B8M(2, 4)	
		N•m	Lbf•ft	N•m	Lbf•ft
1-1/4 or less	1	129	95	64	47
1-1/2, 1-1/2 x 1, 2, or 2 x 1	2 or 2 x 1	96	71	45	33
2-1/2 or 2-1/2 x 1-1/2	3 or 3 x 1-1/2	129	95	64	47
3, 3 x 2, or 3 x 2-1/2	4 or 4 x 2	169	125	88	65
4, 4 x 2-1/2, or 4 x 3	6 or 6 x 2-1/2	271	200	156	115
6	– – –	549	405	366	270
8	– – –	746	550	529	390

1. Determined from laboratory tests.
2. SA193-B8M annealed.
3. SA193-B8M strain hardened.
4. For other materials, contact your Emerson Process Management sales office.

Note

The following step also helps to provide additional assurance that the valve body fluid pressure has been relieved.

CAUTION

Avoid damaging the seating surface caused by the valve plug and stem assembly dropping from the bonnet (key 1, figure 14) after being lifted part way out. When lifting the bonnet, temporarily install a valve stem locknut on the valve stem. The locknut will prevent the valve plug and stem assembly from dropping out of the bonnet.

4. Hex nuts (key 16, figure 16, 17, or 20) or cap screws (not shown) attach the bonnet (key 1, figure 14) to the valve body (key 1, figure 16, 17, or 20). Loosen these nuts or cap screws approximately 3 mm (1/8 inch). Then loosen the body-to-bonnet gasketed joint by either rocking the bonnet or prying between the bonnet and valve. Work the

prying tool around the bonnet until the bonnet loosens. If no fluid leaks from the joint, remove the nuts or cap screws completely and carefully lift the bonnet off the valve.

Table 4. Recommended Torque for Packing Flange Nuts

VALVE STEM DIAMETER		PRESSURE RATING	GRAPHITE TYPE PACKING				PTFE TYPE PACKING			
			Minimum Torque		Maximum Torque		Minimum Torque		Maximum Torque	
mm	Inches		N•m	Lbf•in	N•m	Lbf•in	N•m	Lbf•in	N•m	Lbf•in
9.5	3/8	CL125, 150	3	27	5	40	1	13	2	19
		CL250, 300	4	36	6	53	2	17	3	26
		CL600	6	49	8	73	3	23	4	35
12.7	1/2	CL125, 150	5	44	8	66	2	21	4	31
		CL250, 300	7	59	10	88	3	28	5	42
		CL600	9	81	14	122	4	39	7	58
19.1	3/4	CL125, 150	11	99	17	149	5	47	8	70
		CL250, 300	15	133	23	199	7	64	11	95
		CL600	21	182	31	274	10	87	15	131
25.4	1	CL300	26	226	38	339	12	108	18	162
		CL600	35	310	53	466	17	149	25	223
31.8	1-1/4	CL300	36	318	54	477	17	152	26	228
		CL600	49	437	74	655	24	209	36	314

5. Remove the locknut and separate the valve plug and stem from the bonnet. Set the parts on a protective surface to prevent damage to gasket or seating surfaces.

CAUTION

To prevent possible product damage, cover the opening in the valve in the following procedure to prevent foreign material from getting into the valve body cavity.

6. Remove the bonnet gasket (key 10, figure 16, 17, or 20) and cover the opening in the valve to protect the gasket surface and prevent foreign material from getting into the valve body cavity.
7. Remove the packing flange nuts, packing flange, upper wiper, and packing follower (keys 5, 3, 12, and 13, figure 14). Carefully push out all the remaining packing parts from the valve side of the bonnet using a rounded rod or other tool that will not scratch the packing box wall. Clean the packing box and the metal packing parts.
8. Inspect the valve stem threads and packing box surfaces for any sharp edges which might cut the packing. Scratches or burrs could cause packing box leakage or damage to the new packing. If the surface condition cannot be improved by light sanding, replace the damaged parts by following the appropriate steps in the Trim Maintenance procedure.
9. Remove the covering protecting the valve body cavity and install a new bonnet gasket (key 10, figure 16, 17, or 20), making sure the gasket seating surfaces are clean and smooth. Then slide the bonnet over the stem and onto the stud bolts (key 15, figure 16, 17, or 20) or onto the valve body cavity if cap screws (not shown) will be used instead.

Note

Proper performance of the bolting procedures in step 10 compresses the spiral wound gasket (key 12, figure 16 or 17) or load ring (key 26, figure 20) enough to both load and seal the seat ring gasket (key 13, figure 16, 17 or 20). It also compresses the outer edge of the bonnet gasket (key 10, figure 16 through 20) enough to seal the body-to-bonnet joint.

The proper bolting procedures in step 10 include--but are not limited to--ensuring that bolting threads are clean, and evenly tightening the cap screws, or the nuts onto the studs, in a crisscross pattern. Tightening one cap screw or nut may loosen an adjacent cap screw or nut. Repeat the crisscross tightening pattern several times until each cap screw or nut is tight and the body-to-bonnet seal is made. When the operating temperature has been reached, perform this torquing procedure once again.

Figure 5. Detail of Graphite Ribbon/Filament Packing for Plain and Extension Bonnets

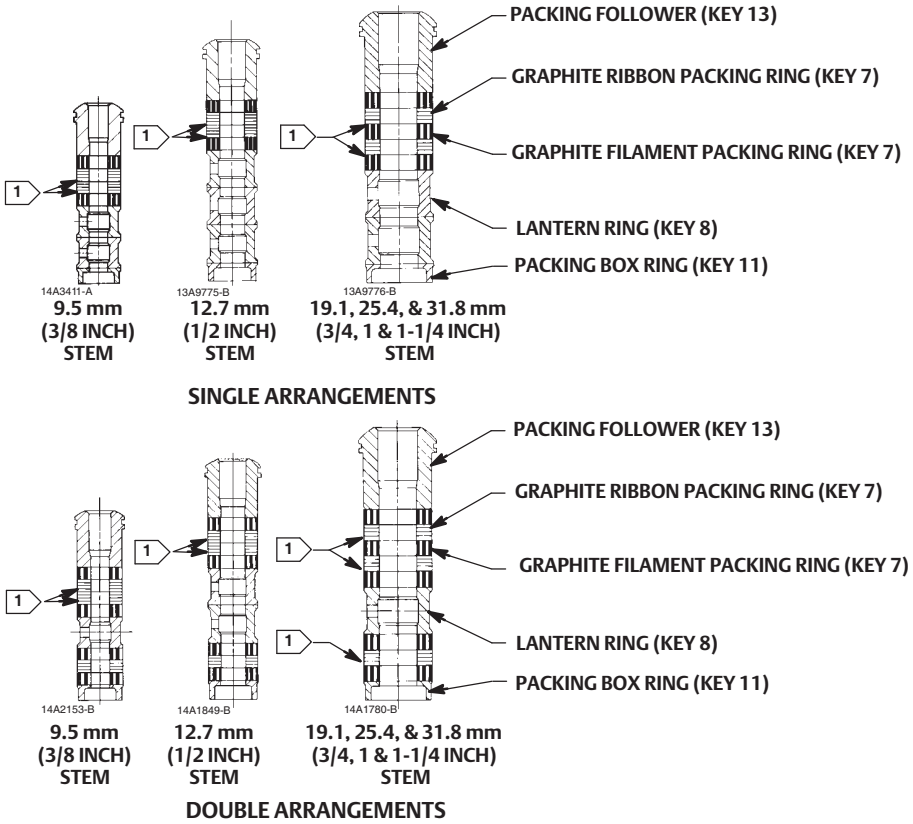

A5864

1 NOTE:
0.102 mm (0.004 INCH) THICK SACRIFICIAL ZINC WASHERS; USE ONLY ONE BELOW EACH GRAPHITE RIBBON RING.

10. Lubricate the bolting (not necessary if factory pre-lubricated stud bolt nuts are used) and install it, using accepted bolting procedures during tightening, so that the body-to-bonnet joint will withstand test pressures and application service conditions. Use the bolt torques in table 3 as guidelines.
11. Install new packing and the metal packing box parts according to the appropriate arrangement in figure 3, 4, or 5. Place a smooth-edged pipe over the valve stem and gently tap each soft packing part into the packing box.
12. Slide the packing follower, upper wiper, and packing flange (keys 13, 12, and 3, figure 14) into position. Lubricate the packing flange studs (key 4, figure 14) and the faces of the packing flange nuts (key 5, figure 14). Install the packing flange nuts.
13. **For spring-loaded PTFE V-ring packing,** tighten the packing flange nuts until the shoulder on the packing follower (key 13, figure 14) contacts the bonnet.

For graphite packing, tighten the packing flange nuts to the maximum recommended torque shown in table 4. Then, loosen the packing flange nuts, and retighten them to the recommended minimum torque shown in table 4.

For other packing types, tighten the packing flange nuts alternately in small equal increments until one of the nuts reaches the minimum recommended torque shown in table 4. Then, tighten the remaining flange nut until the packing flange is level and at a 90-degree angle to the valve stem.

For ENVIRO-SEAL or HIGH-SEAL live-loaded packing, refer to the note at the beginning of Packing Maintenance.

14. Mount the actuator on the valve assembly and reconnect the actuator and valve stem according to the procedure in the appropriate actuator instruction manual.

Figure 6. TSO (Tight Shutoff Trim), Detail of Protected Soft Seat

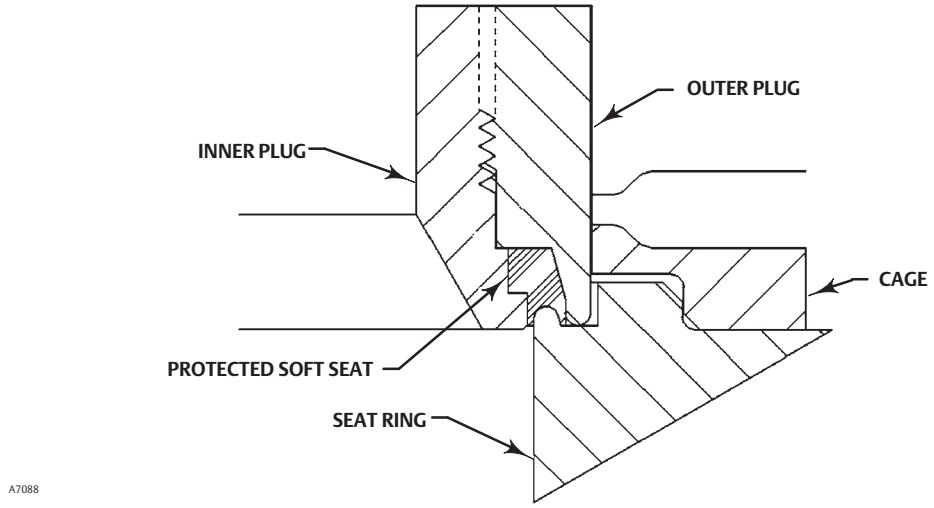

Trim Maintenance

⚠ WARNING

Refer to the WARNING at the beginning of the Maintenance section in this instruction manual.

Except where indicated, key numbers in this section are referenced in figure 16 for standard NPS 1 through 6 constructions, figure 17 for Whisper Trim III detail, figures 18 and 19 for WhisperFlo trim, and figure 20 for Cavitrol III detail and the NPS 8 ET valve.

Disassembly

1. Remove the actuator and the bonnet according to steps 1 through 6 of the Replacing Packing procedure in the Maintenance section.

⚠ WARNING

To avoid personal injury due to leaking fluid, avoid damaging gasket sealing surfaces. The surface finish of the valve stem (key 7) is critical for making a good packing seal. The inside surface of the cage or cage/baffle assembly (key 3), or cage retainer (key 31), is critical for smooth operation of the valve plug. The seating surfaces of the valve plug (key 2) and seat ring (key 9) are critical for proper shutoff. Unless inspection reveals otherwise, assume all these parts are in good condition and protect them accordingly.

2. Remove the packing flange nuts, packing flange, upper wiper, and packing follower (keys 5, 3, 12, and 13 in figure 14). Carefully push out all the remaining packing parts from the valve side of the bonnet using a rounded rod or other tool that will not scratch the packing box wall. Clean the packing box and the metal packing parts.
3. Inspect the valve stem threads and packing box surfaces for any sharp edges which might cut the packing. Scratches or burrs could cause packing box leakage or damage to the new packing. If the surface condition cannot be improved by light sanding, replace the damaged parts.

4. Remove the load ring (key 26) from an NPS 8 ET valve, or the cage adaptor (key 4) from any restricted-trim valve through NPS 4, and wrap it for protection.
5. On an NPS 6 ET valve with Whisper Trim III or WhisperFlo cage, also remove the bonnet spacer (key 32) and bonnet gasket (key 10) on top of the spacer. Then on any construction with a cage retainer (key 31), remove the cage retainer and its associated gaskets. A Whisper Trim III and WhisperFlo cage retainer has two 3/8-inch-16 UNC tappings in which screws or bolts can be installed for lifting.
6. Remove the cage or cage/baffle assembly (key 3), the associated gaskets (keys 10, 11, and 12), and shim (key 51). If the cage is stuck in the valve, use a rubber mallet to strike the exposed portion of the cage at several points around its circumference.
7. **For constructions other than TSO (tight shutoff) trim**, remove the seat ring or liner (key 9) or disk seat (key 22), seat ring gasket (key 13), and the seat ring adaptor (key 5) and adaptor gasket (key 14) where used in a restricted-trim seat ring construction. PTFE-seat constructions use a disk (key 23) sandwiched between the disk seat and disk retainer (key 21).
8. **For TSO (tight shutoff) trim constructions**, perform the following steps (refer to figures 6 and 7):

- Remove the retainer, backup ring, anti-extrusion rings, and piston ring.
- Remove the set screws that lock the outer plug to the inner plug.
- Using a strap wrench or similar tool, unscrew the outer plug from the inner plug. Do not damage the outer plug guide surfaces.
- Remove the protected soft seat seal.
- Inspect the parts for damage and replace if needed.

9. **For all constructions**, inspect parts for wear or damage which would prevent proper operation of the valve. Replace or repair trim parts according to the following procedure for Lapping Metal Seats or other valve plug maintenance procedures as appropriate.

Lapping Metal Seats

CAUTION

To avoid damaging the ENVIRO-SEAL Bellows Seal Bonnet assembly, do not attempt to lap the metal seating surfaces. The design of the assembly prevents rotation of the stem and any forced lapping rotation will damage internal components of the ENVIRO-SEAL Bellows Seal bonnet.

Except with respect to the ENVIRO-SEAL Bellows Seal Bonnet assembly, with metal-seat constructions, lapping seating surfaces of the valve plug and seat ring or liner (keys 2 and 9, figure 16, 17, or 20) can improve shutoff. (Deep nicks should be machined out rather than ground out.) Use a good quality lapping compound of a mixture of 280 to 600-grit. Apply the compound to the bottom of the valve plug.

Assemble the valve to the extent that the cage and the cage retainer and bonnet spacer (if used) are in place and the bonnet is bolted to the valve body. A simple handle can be made from a piece of strap iron locked to the valve plug stem with nuts. Rotate the handle alternately in each direction to lap the seats. After lapping, remove the bonnet and clean the seat surfaces. Completely assemble as described in the Assembly portion of the Trim Maintenance procedure and test the valve for shutoff. Repeat the lapping procedure if leakage is still excessive.

Figure 7. Typical Balanced TSO Trim

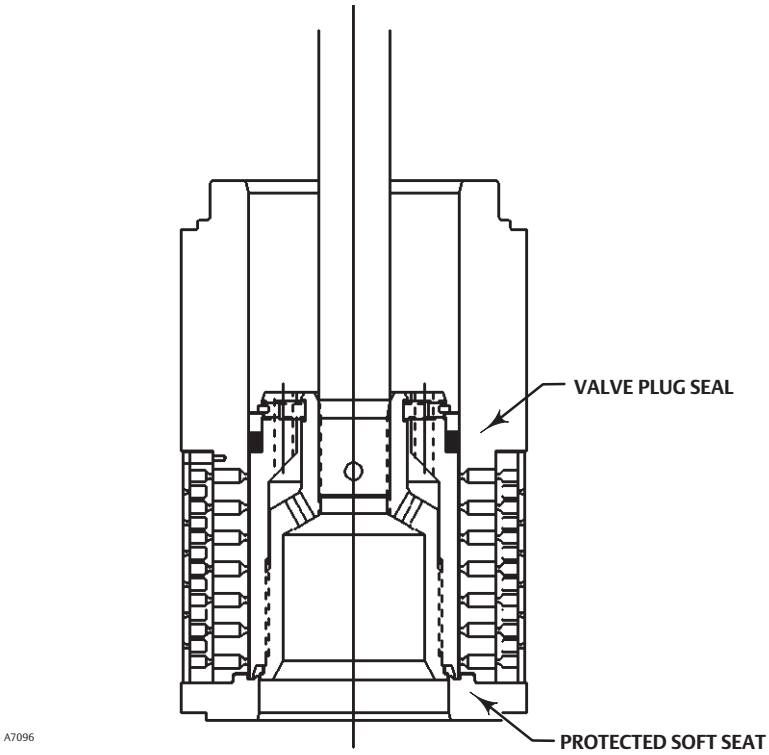

Valve Plug Maintenance

Except where indicated, key numbers in this section are referenced in figure 16 for standard NPS 1 through 6 constructions, figure 17 for Whisper Trim III, figures 18 and 19 for WhisperFlo trim, and figure 20 for Cavitrol III detail and the NPS 8 ET valve.

CAUTION

To avoid the valve plug seal ring (key 28) not sealing properly, be careful not to scratch the surfaces of the ring groove in the valve plug or any of the surfaces of the replacement ring.

1. With the valve plug (key 2) removed according to the Disassembly portion of the Trim Maintenance procedure, proceed as appropriate:

For the two-piece seal ring, The ring cannot be reused because it is a closed ring which must be pried and/or cut from the groove. Once the seal ring is removed, the elastomeric backup ring (key 29), which is also a closed ring, can be pried from the groove.

CAUTION

To avoid damaging the seal ring, slowly and gently stretch it for the following procedure. Avoid jerking sharply on the ring.

To install a new two-piece seal ring, apply a general purpose silicone-base lubricant to both the backup ring and seal ring (keys 29 and 28). Place the backup ring over the stem (key 7) and into the groove. Place the seal ring over the top edge of the valve plug (key 2) so that it enters the groove on one side of the valve plug. Slowly and gently stretch the seal ring and work it over the top edge of the valve plug. The PTFE material in the seal ring must be permitted time to cold-flow during the stretching procedure, so avoid jerking sharply on this ring. Stretching the seal ring over the valve plug may make it seem unduly loose when in the groove, but it will contract to its original size after insertion into the cage.

For the spring-loaded seal ring, the ring used on a valve plug having a 136.5 mm (5.375 inch) or less port diameter may be removed undamaged by first working the retaining ring (key 27) off with a screwdriver. Then carefully slide the metal backup ring (key 29) and seal ring (key 28) off the valve plug (key 2). The spring-loaded seal ring used on a valve plug having a 178 mm (7-inch) or greater port diameter must be carefully pried and/or cut from its groove. Therefore, it cannot be reused.

A spring-loaded seal ring must be installed so that its open side faces toward the valve stem, or toward the seat of the plug depending on flow direction, as shown in view A of figure 16 or 20. To install a spring-loaded seal ring on a valve plug with a 136.5 mm (5.375 inch) or less port diameter, slide the seal ring (key 28) onto the valve plug followed by the metal backup ring (key 29). Then install the retaining ring (key 27) by inserting one end in the groove and, while turning the plug, press the ring into the groove. Again, be careful not to scratch any surfaces of the ring or plug.

CAUTION

To avoid damaging the seal ring, slowly and gently stretch it for the following procedure. Avoid jerking sharply on the ring.

To install the seal ring on a valve plug with 178 mm (7-inch) or greater port diameter, lubricate it with a general purpose silicone-base lubricant. Then gently stretch the seal ring and work it over the top edge of the valve plug. The PTFE material in the seal ring must be permitted time to cold-flow during the stretching procedure, so avoid jerking sharply on the ring. Stretching the seal ring over the valve plug may make it seem unduly loose when in the groove, but it will contract to its original size after insertion into the cage.

CAUTION

Never reuse an old stem or adaptor with a new valve plug. Using an old stem or adaptor with a new plug requires drilling a new pin hole in the stem (or adaptor, in case an ENVIRO-SEAL bellows seal bonnet is being used). This drilling weakens the stem or adaptor and may cause failure in service. However, a used valve plug may be reused with a new stem or adaptor, except with Cavitrol III trim.

Note

The valve plug and valve plug stem for 2-stage Cavitrol III trim are a matched set and must be ordered together. If the 2-stage Cavitrol III valve plug or valve plug stem is damaged, replace the entire assembly (key 2, figure 20).

Note

For plain bonnets and style 1 extension bonnets, the valve plug
(key 2), valve stem (key 7), and pin (key 8) are available completely assembled. Refer to the Key 2, 7, and 8 Valve Plug and Stem Assembly tables in the Parts List.

2. To replace the valve stem (key 7), drive out the pin (key 8). Unscrew the valve plug from the stem or adaptor.
3. To replace the adaptor (key 24, figure 14) on ENVIRO-SEAL bellows seal bonnets, place the plug stem assembly and valve plug in a soft-jaw chuck or other type of vise so that the jaws grip a portion of the valve plug that is not a seating surface. Drive out the pin (key 36, figure 14). Reverse the plug stem assembly in the soft-jaw chuck or vise. Grip the flat areas on the valve stem just below the threads for the actuator/stem connection. Unscrew the valve plug/adaptor assembly (key 24, figure 14) from the valve stem assembly (key 20, figure 14).
4. Screw the new stem or adaptor into the valve plug. Tighten to the torque value given in table 5. Refer to table 5 to select the proper hole size. Drill through the stem or adaptor, using the hole in the valve plug as a guide. Remove any chips or burrs and drive in a new pin to lock the assembly.

Table 5. Valve Stem Connection Assembly Torque and Pin Replacement

VALVE STEM DIAMETER		TORQUE, MINIMUM TO MAXIMUM		HOLE SIZE	
mm	Inches	N•m	Lbf•ft	mm	Inch
9.5	3/8	40-47	25-35	2.41 - 2.46	0.095 - 0.097
12.7	1/2	81-115	60-85	3.20 - 3.25	0.126 - 0.128
19.1	3/4	237-339	175-250	4.80 - 4.88	0.189 - 0.192
25.4	1	420-481	310-355	6.38 - 6.45	0.251 - 0.254
31.8	1-1/4	827-908	610-670	6.38 - 6.45	0.251 - 0.254

5. For ENVIRO-SEAL bellows seal bonnets, grip the flats of the stem extending out of the top of the bellows shroud with a soft-jaw chuck or other type of vise. Screw the valve plug/adaptor assembly onto the valve stem. Tighten as necessary to align the pin hole in the stem with one of the holes in the adaptor. Secure the adaptor to the stem with a new pin.

Assembly

Except where indicated, key numbers are referenced in figure 16 for standard NPS 1 through 6 constructions, figure 17 for Whisper Trim III detail, figures 18 and 19 for WhisperFlo detail, and figure 20 for Cavitrol III detail and the NPS 8 ET valve.

1. With a restricted-trim seat ring construction, install the adaptor gasket (key 14) and seat ring adaptor (key 5).
2. Install the seat ring gasket (key 13), seat ring or liner (key 9), or disk seat (key 22). With a PTFE-seat construction, install the disk and disk retainer (keys 21 and 23).
3. Install the cage or cage/baffle assembly (key 3). Any rotational orientation of the cage or assembly with respect to the valve body is acceptable. A Whisper Trim III cage designated by level A3, B3, or C3 may be installed with either end up. The level D3 cage/baffle assembly or Cavitrol III cage assembly, however, must be installed with the hole pattern end next to the seat ring. If a cage retainer (key 31) is to be used, place it on top of the cage.
4. **For constructions other than TSO (tight shutoff) trim**, slide the valve plug (key 2) and stem assembly, or valve plug and ENVIRO-SEAL bellows seal assembly, into the cage. Make sure the seal ring (key 28) is evenly engaged in the entrance chamfer at the top of the cage (key 3) or cage retainer (key 31) to avoid damaging the ring.
5. **For TSO (tight shutoff) trim constructions**, perform the following steps (refer to figures 6 and 7).

- Thread the outer plug onto the inner plug until the parts seat metal to metal, using a strap wrench or similar tool that will not damage the outer plug guide surfaces.
- Mark the top of the inner plug and outer plug with alignment marks in the assembled position.
- Disassemble the outer plug from the inner plug and install the seal over the inner plug, so that the seal rests below the threaded area.
- Thread the outer plug onto the inner plug and tighten with a strap wrench or similar tool until the alignment marks line up. This will ensure that the plug parts are metal to metal and the seal is compressed properly. Do not damage the outer plug guide surfaces.

- Install set screws centering the inner plug in the outer plug and torque to 11 N•m (8 lbf•ft).
- Assemble the piston ring, anti-extrusion rings, backup ring, and retainer.

6. **For all constructions**, place the gaskets (keys 12, 11 or 14 if used, and 10) and the shim (key 51) on top of the cage or cage retainer. If there is a cage adaptor (key 4) or a bonnet spacer (key 32), set it on the cage or cage retainer gaskets and place another flat sheet gasket (key 10) on top of the adaptor or spacer. If there is only a cage retainer, place another flat sheet gasket on the retainer.
7. With an NPS 8 ET valve, install the load ring (key 26).
8. Mount the bonnet on the valve body and complete assembly according to steps 10 through 14 of the Replacing Packing procedure. Be sure to observe the note prior to step 10.

ENVIRO-SEAL Bellows Seal Bonnet

Replacing a Plain or Extension Bonnet with an ENVIRO-SEAL Bellows Seal Bonnet (Stem/Bellows Assembly)

1. Remove the actuator and bonnet according to steps 1 through 5 of the Replacing Packing procedure in the Maintenance section.
2. With care, remove the valve plug and stem assembly from the valve body. If necessary, also lift out the cage.

CAUTION

To prevent possible product damage, cover the opening in the valve in the following procedure to protect the sealing surfaces and to prevent foreign material from getting into the valve body cavity.

3. Remove and discard the existing bonnet gasket. Cover the valve body opening to protect sealing surfaces and to prevent foreign material from entering the valve body cavity.

Note

The ENVIRO-SEAL stem/bellows assembly for easy-e valves is available only with a threaded and drilled plug/adaptor/stem connection. The existing valve plug can be reused with the new stem/bellows assembly or a new plug can be installed.

4. Inspect the existing valve plug. If the plug is in good condition, it can be reused with the new ENVIRO-SEAL stem/bellows assembly. To remove the existing valve plug from the stem, first, place the existing plug stem assembly and valve plug in a soft-jaw chuck or other type of vise so that the jaws grip a portion of the valve plug that is not a seating surface. Drive out or drill out the pin (key 8).
5. Reverse the plug stem assembly in the soft-jaw chuck or vise. Grip the valve stem in an appropriate place and unscrew the existing plug from the valve stem.

Table 6. Recommended Torque for ENVIRO-SEAL Bellows Seal Packing Flange Nuts

VALVE SIZE, NPS	VALVE STEM DIAMETER THROUGH PACKING	MINIMUM TORQUE		MAXIMUM TORQUE	
		N•m	Lbf•in	N•m	Lbf•in
1 - 2	1/2	2	22	4	33
3 - 8	1	5	44	8	67

CAUTION

When installing a valve plug on the ENVIRO-SEAL stem/bellows assembly, the valve stem must not be rotated. Damage to the bellows may result.

To avoid product damage, do not grip the bellows shroud or other parts of the stem/bellows assembly. Grip only the flat areas on the stem where it extends out of the top of the bellows shroud.

Note

The ENVIRO-SEAL stem/bellows assembly has a one-piece stem.

CAUTION

To avoid damaging parts, do not grip the valve plug on any seating surface in the following procedure.

6. To attach the valve plug to the stem of the new ENVIRO-SEAL stem/bellows assembly, first attach the plug to the adaptor (key 24). Locate the adaptor. Notice that a hole has not been drilled in the threads where the plug screws onto the adaptor. Secure the valve plug in a soft-jaw chuck or other type of vise. Do not grip the plug on any seating surface. Position the plug in the chuck or vise for easy threading of the adaptor. Thread the adaptor into the valve plug and tighten to the appropriate torque value.
7. Select the proper size of drill bit and drill through the adaptor using the hole in the valve plug as a guide. Remove any metal chips or burrs and drive in a new pin to lock the plug/adaptor assembly together.
8. Attach the plug/adaptor assembly to the ENVIRO-SEAL stem/bellows assembly by first securing the stem/bellows assembly in a soft-jaw chuck or other type of vise so that the jaws of the chuck or vise grip the flats of the stem extending out of the top of the bellows shroud. Screw the valve plug/adaptor assembly onto the valve stem. Tighten as necessary to align the pin hole in the stem with one of the holes in the adaptor. Secure the adaptor to the stem with a new pin.
9. Inspect the seat ring (key 9) and soft seat parts (keys 21, 22, and 23); replace, if necessary.
10. Place a new gasket (key 10) into the valve body in place of the bonnet gasket. Install the new stem/bellows assembly with valve plug/adaptor by placing it into the valve body on top of the new bellows gasket.
11. Place a new gasket (key 22) over the stem/bellows assembly. Place the new ENVIRO-SEAL bonnet over the stem/bellows assembly.
12. Properly lubricate the bonnet stud bolts. Install and tighten the bonnet hex nuts to the proper torque.
13. Install new packing and the metal packing box parts according to the appropriate arrangement in figure 8 or 9.
14. Install the packing flange. Properly lubricate the packing flange stud bolts and the faces of the packing flange nuts.

For graphite packing, tighten the packing flange nuts to the maximum recommended torque shown in table 6. Then, loosen the packing flange nuts, and retighten them to the recommended minimum torque shown in table 6.

For other packing types, tighten the packing flange nuts alternately in small equal increments until one of the nuts reaches the minimum recommended torque shown in table 6. Then, tighten the remaining flange nut until the packing flange is level and at a 90-degree angle to the valve stem.

15. Install travel indicator parts and stem locknuts; mount the actuator on the valve body according to the procedure in the appropriate actuator instruction manual.

Figure 8. PTFE Packing Arrangements for Use in ENVIRO-SEAL Bellows Seal Bonnets

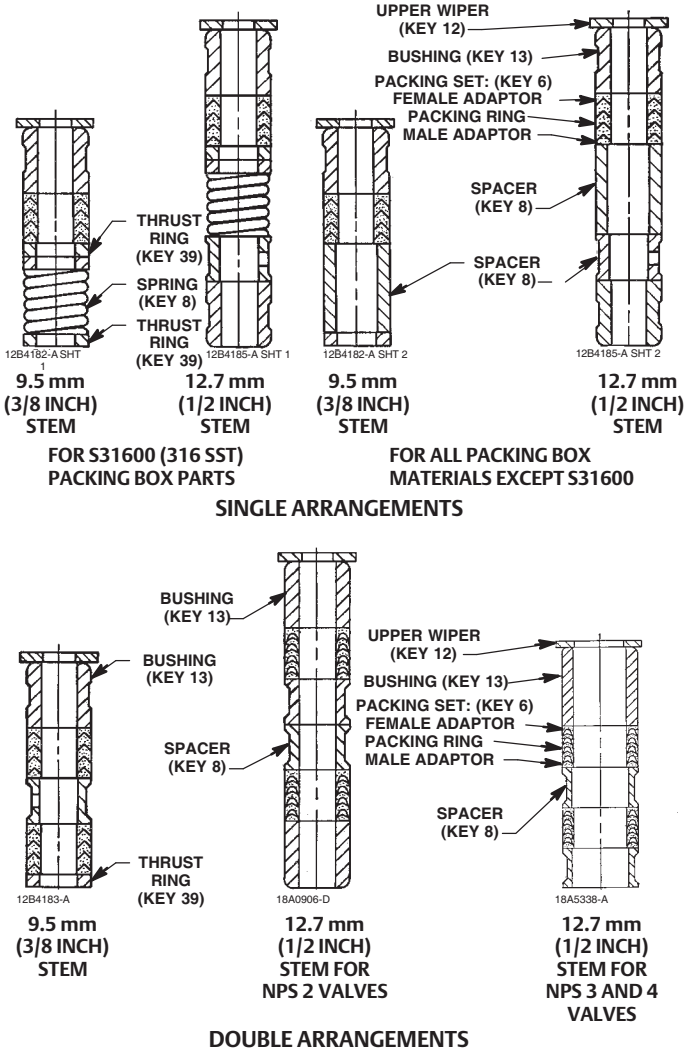

Replacement of an Installed ENVIRO-SEAL Bellows Seal Bonnet (Stem/Bellows Assembly)

1. Remove the actuator and bonnet according to steps 1 through 5 of the Replacing Packing procedure in the Maintenance section.

CAUTION

To prevent possible product damage, cover the opening in the valve in the following procedure to protect the sealing surfaces and to prevent foreign material from getting into the valve body cavity.

2. Carefully remove the ENVIRO-SEAL stem/bellows assembly. If necessary, also lift out the cage. Remove and discard the existing bonnet gasket and bellows gasket. Cover the valve body opening to protect sealing surfaces and to prevent foreign material from entering the valve body cavity.

CAUTION

The ENVIRO-SEAL stem/bellows assembly for easy-e valves is available only with a threaded and drilled plug/adaptor/stem connection. The existing valve plug can be reused with the new stem/bellows assembly or a new plug can be installed. If the existing valve plug is reused, and the adaptor is in good condition, it may be also reused. However, never reuse an old adaptor with a new valve plug. Using an old adaptor with a new valve plug requires drilling a new pin hole in the adaptor. This drilling weakens the adaptor and may cause failure in service. However, a used valve plug may be reused with a new adaptor, except with Cavitrol III trim.

3. Inspect the existing valve plug and adaptor. If they are in good condition, they can be reused with the new stem/bellows assembly and they do not need to be separated.

CAUTION

When removing/installing a valve plug on the ENVIRO-SEAL stem/bellows assembly, the valve stem must not be rotated. Damage to the bellows may result.

To avoid product damage, do not grip the bellows shroud or other parts of the stem/bellows assembly. Grip only the flat areas on the stem where it extends out of the top of the bellows shroud.

Note

The ENVIRO-SEAL stem/bellows assembly has a one-piece stem.

4. If the valve plug and adaptor are not in good condition and must be replaced, first remove the valve plug/adaptor assembly from the stem/bellows assembly; then remove the valve plug from the adaptor. First, place the stem/bellows assembly and valve plug in a soft-jaw chuck or other type of vise so that the jaws grip a portion of the valve plug that is not a seating surface. Drive out or drill out the pin (key 8, figure 16, 17, or 20). Drive out the pin (key 36, figure 14).
5. Reverse the stem/bellows and plug/adaptor assembly in the soft-jaw chuck or vise. Grip the flat areas on the valve stem just below the threads for the actuator/stem connection. Unscrew the plug/adaptor assembly from the stem/bellows assembly. Unscrew the valve plug from the adaptor.
6. To attach either the existing valve plug or a new one to the stem of the new ENVIRO-SEAL stem/bellows assembly, first attach the plug to the adaptor (if the valve plug was removed from the adaptor) as follows:

- Locate the adaptor. Notice that a hole has not been drilled in the threads where the plug screws onto the adaptor.

CAUTION

To avoid damaging parts, do not grip the valve plug on any seating surface in the following procedure.

Figure 9. Double Graphite Ribbon/Filament Arrangements for Use in ENVIRO-SEAL Bellows Seal Bonnets

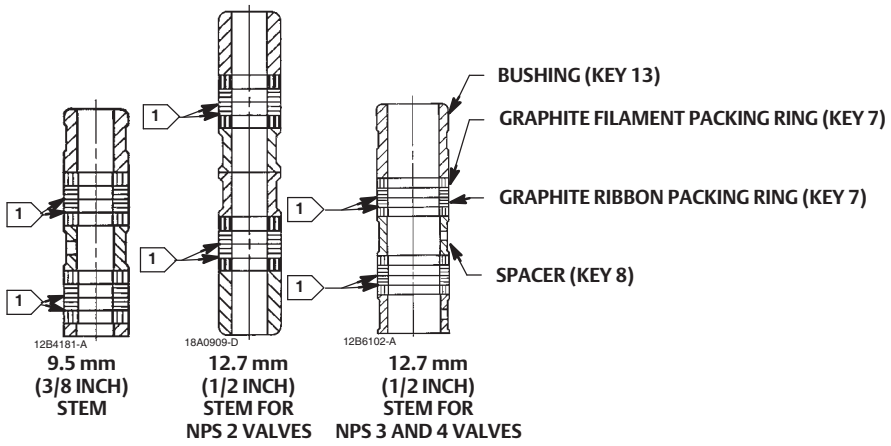

A5870

1 NOTE:
0.102 mm (0.004 INCH) THICK SACRIFICIAL ZINC WASHERS; USE ONLY ONE BELOW EACH GRAPHITE RIBBON RING.

- Secure the valve plug in a soft-jaw chuck or other type of vise. Do not grip the plug on any seating surface. Position the plug in the chuck or vise for easy threading of the adaptor.
- Thread the adaptor into the valve plug and tighten to the appropriate torque value.

7. Complete the installation by following steps 7 through 9 and steps 12 through 15 of the ENVIRO-SEAL Bellows Seal Bonnet installation instructions found on pages 14 and 15.

Purging the ENVIRO-SEAL Bellows Seal Bonnet

The ENVIRO-SEAL bellows seal bonnet can be purged or leak tested. Refer to figure 14 for an illustration of an ENVIRO-SEAL bellows seal bonnet, and perform the following steps for purging or leak testing.

1. Remove the two diametrically opposed pipe plugs (key 16).
2. Connect a purging fluid to one of the pipe plug connections.
3. Install appropriate piping or tubing in the other pipe plug connection to pipe away the purging fluid or to make a connection to an analyzer for leak testing.
4. When purging or leak testing has been completed, remove the piping or tubing and reinstall the pipe plugs (key 16).

Table 7. Standard Material Designations

Standard Designation	Common Name or Tradename
CoCr-A Hardfacing Alloy R30006 S17400 SST S31600 SST	CoCr-A Alloy 6 Casting 17-4PH Stainless Steel 316 Stainless Steel
S41000 SST S41600 SST WCC Carbon Steel Casting	410 Stainless Steel 416 Stainless Steel WCC

Parts Ordering

Each body-bonnet assembly is assigned a serial number which can be found on the valve. This same number also appears on the actuator nameplate when the valve is shipped from the factory as part of a control valve assembly. Refer to the serial number when contacting your Emerson Process Management sales office for technical assistance. When ordering replacement parts, refer to the serial number and to the eleven-character part number for each part required from the following parts kit or parts list information.

Refer to table 7 for standard and common material designations.

⚠ WARNING

Use only genuine Fisher replacement parts. Components that are not supplied by Emerson Process Management should not, under any circumstances, be used in any Fisher valve, because they may void your warranty, might adversely affect the performance of the valve, and could cause personal injury and property damage.

Note

Neither Emerson, Emerson Process Management, nor any of their affiliated entities assumes responsibility for the selection, use, or maintenance of any product. Responsibility for the selection, use, and maintenance of any product remains with the purchaser and end user.

Parts Kits

Gasket Kits

Gasket Kits (includes keys 10, 11, 12, 13, and 51; plus 14 and 20 on some restricted capacity valves)

DESCRIPTION	PART NUMBER
Full Capacity Valves	**-198° to 593°C (-325° to 1100°F)**
NPS 1 & 1-1/4	RGASKETX162
NPS 1-1/2 (NPS 2 EAT)	RGASKETX172
NPS 2	RGASKETX182
NPS 2-1/2 (NPS 3 EAT)	RGASKETX192
NPS 3 (NPS 4 EAT)	RGASKETX202
NPS 4 (NPS 6 EAT)	RGASKETX212
NPS 6	RGASKETX222
NPS 8	RGASKETX232
Restricted Capacity Valves w/ Metal Seating	
NPS 1-1/2 x 1 (NPS 2 x 1 EAT)	RGASKETX242
NPS 2 x 1	RGASKETX252
NPS 2-1/2 x 1-1/2 (NPS 3 x 1-1/2 EAT)	RGASKETX262
NPS 3 x 2 (NPS 4 x 2 EAT)	RGASKETX272
NPS 4 x 2-1/2 (NPS 6 x 2-1/2 EAT)	RGASKETX282

Packing Kits

Standard Packing Repair Kits (Non Live-Loaded)

Standard Packing Repair Kits (non live-loaded)

Stem Diameter, mm (Inches) Yoke Boss Diameter, mm (Inches)	9.5 (3/8) 54 (2-1/8)	12.7 (1/2) 71 (2-13/16)	19.1 (3/4) 90 (3-9/16)
PTFE (Contains keys 6, 8, 10, 11, and 12)	RPACKX00012	RPACKX00022	RPACKX00032
Double PTFE (Contains keys 6, 8, 11, 12)	RPACKX00042	RPACKX00052	RPACKX00062
PTFE/Composition (Contains keys 7, 8, 11, and 12)	RPACKX00072	RPACKX00082	RPACKX00092
Single Graphite Ribbon/Filament (Contains keys 7 [ribbon ring], 7 [filament ring], 8, and 11)	RPACKX00102	RPACKX00112	RPACKX00122
Single Graphite Ribbon/Filament (Contains keys 7 [ribbon ring], 7 [filament ring])	RPACKX00132	RPACKX00142	RPACKX00152
Double Graphite Ribbon/Filament (Contains keys 7 [ribbon ring], 7 [filament ring], 8, and 11)	RPACKX00162	RPACKX00172	RPACKX00182

ENVIRO-SEAL Packing Retrofit Kits

Retrofit kits include parts to convert valves with existing standard bonnets to the ENVIRO-SEAL packing box construction. Refer to figure 11 for key numbers for PTFE packing, to figure 12 for key numbers for Graphite ULF packing, and to figure 13 for key numbers for duplex packing. PTFE kits include keys 200, 201, 211, 212, 214, 215, 216, 217, 218, tag, and cable tie. Graphite ULF kits include keys 200, 201, 207, 208, 209, 210, 211, 212, 214, 217, tag, and cable tie. Duplex kits include keys 200, 201, 207, 209, 211, 212, 214, 215, 216, 217, tag, and cable tie.

Stems and packing box constructions that do not meet Emerson Process Management stem finish specifications, dimensional tolerances, and design specifications, may adversely alter the performance of this packing kit.

For part numbers of individual components in the ENVIRO-SEAL packing kits, refer to instruction manual ENVIRO-SEAL Packing System for Sliding-Stem Valves, D101642X012.

ENVIRO-SEAL Packing Retrofit Kits

PACKING MATERIAL	STEM DIAMETER AND YOKE BOSS DIAMETER, mm (INCH)				
	9.5 (3/8) 54 (2-1/8)	12.7 (1/2) 71 (2-13/16)	19.1 (3/4) 90 (3-9/16)	25.4 (1) 127 (5)	31.8 (1-1/4) 127 (5, 5H)
Double PTFE	RPACKXRT012	RPACKXRT022	RPACKXRT032	RPACKXRT042	RPACKXRT052
Graphite ULF	RPACKXRT262	RPACKXRT272	RPACKXRT282	RPACKXRT292	RPACKXRT302
Duplex	RPACKXRT212	RPACKXRT222	RPACKXRT232	RPACKXRT242	RPACKXRT252

ENVIRO-SEAL Packing Repair Kits

Repair kits include parts to replace the “soft” packing materials in valves that already have ENVIRO-SEAL packing arrangements installed or in valves that have been upgraded with ENVIRO-SEAL retrofit kits. Refer to figure 11 for key numbers for PTFE packing, to figure 12 for key numbers for Graphite ULF packing, and to figure 13 for key numbers for duplex packing. PTFE repair kits include keys 214, 215, and 218. Graphite ULF repair kits include keys 207, 208, 209, 210, and 214. Duplex repair kits include keys 207, 209, 214, and 215.

Stems and packing box constructions that do not meet Emerson Process Management stem finish specifications, dimensional tolerances, and design specifications, may adversely alter the performance of this packing kit.

For part numbers of individual components in the ENVIRO-SEAL packing kits, refer to instruction manual ENVIRO-SEAL Packing System for Sliding-Stem Valves, D101642X012.

ENVIRO-SEAL Packing Repair Kits

Stem Diameter, mm (Inches) Yoke Boss Diameter, mm (Inches)	9.5 (3/8) 54 (2-1/8)	12.7 (1/2) 71 (2-13/16)	19.1 (3/4) 90 (3-9/16)	25.4 (1) 127 (5)	31.8 (1-1/4) 127 (5, 5H)
Double PTFE (contains keys 214, 215, & 218)	RPACKX00192	RPACKX00202	RPACKX00212	RPACKX00222	RPACKX00232
Graphite ULF (contains keys 207, 208, 209, 210, and 214)	RPACKX00592	RPACKX00602	RPACKX00612	RPACKX00622	RPACKX00632
Duplex (contains keys 207, 209, 214, and 215)	RPACKX00292	RPACKX00302	RPACKX00312	RPACKX00322	RPACKX00332

Figure 10. Typical HIGH-SEAL Graphite ULF Packing System

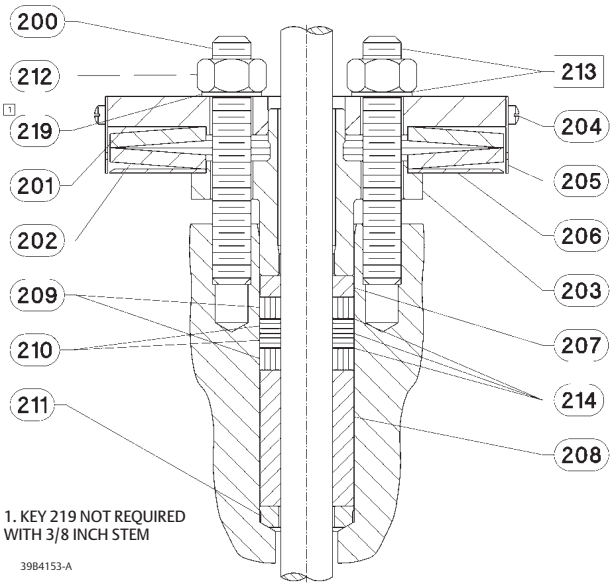

Figure 11. Typical ENVIRO-SEAL Packing System with PTFE Packing

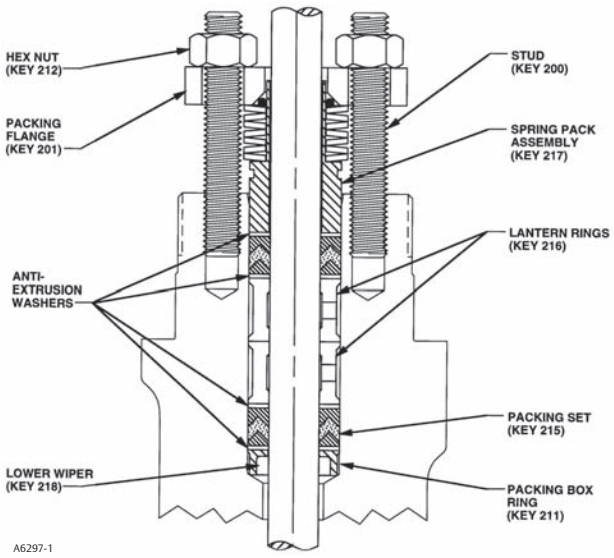

Figure 12. Typical ENVIRO-SEAL Packing System with Graphite ULF Packing

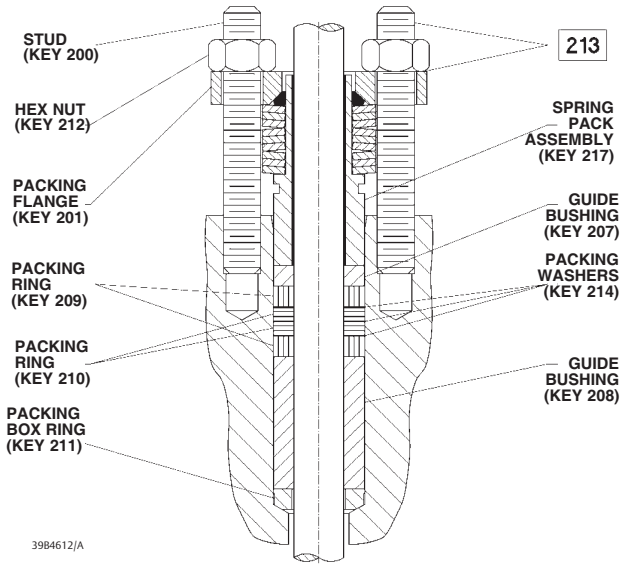

Figure 13. Typical ENVIRO-SEAL Packing System with Duplex Packing

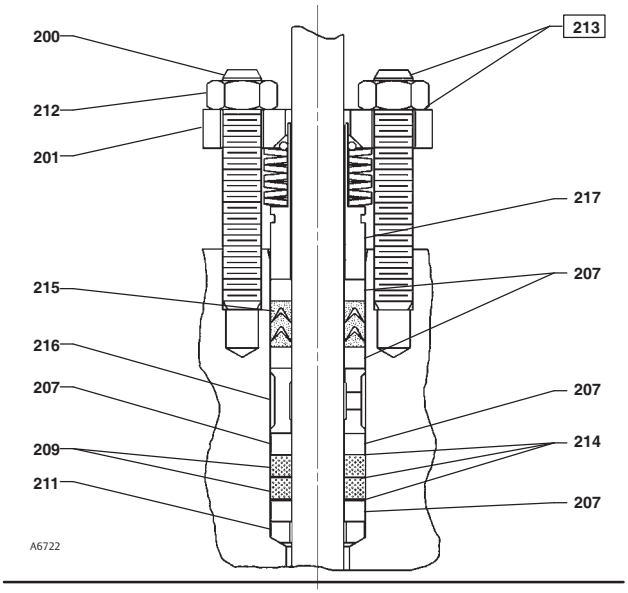

Parts List

Note
Part numbers are shown for recommended spares only. For part numbers not shown, contact your Emerson Process Management sales office.

Bonnet (figures 3 through 9 and figure 14)

Key	Description	Part Number
1	Bonnet/ENVIRO-SEAL bellows seal bonnet If you need a bonnet or an ENVIRO-SEAL bellows seal bonnet as a replacement part, order by valve size and stem diameter, serial number, and desired material.	
2	Extension Bonnet Baffle	
3	Packing Flange	
3	ENVIRO-SEAL bellows seal packing flange	
4	Packing Flange Stud	
4	ENVIRO-SEAL bellows seal stud bolt	
5	Packing Flange Nut	
5	ENVIRO-SEAL bellows seal hex nut	
6*	Packing set, PTFE	see following table
6*	ENVIRO-SEAL bellows seal packing set	
	PTFE for 9.5 mm (3/8 inch) stem (1 req'd for single packing, 2 req'd for double packing)	12A9016X012
	PTFE for NPS 2 with 12.7 mm (1/2 inch) stem (2 req'd for double packing)	12A9016X012
	PTFE for NPS 3 and 4 with 12.7 mm (1/2 inch) stem (2 req'd for double packing)	12A8832X012
7*	Packing ring, PTFE composition	see following table
7*	ENVIRO-SEAL bellows seal packing ring for low chloride graphite ribbon/filament packing arrangement	
	Ribbon packing ring for 9.5 mm (3/8 inch) and NPS 2 with 12.7 mm (1/2 inch) stem (4 req'd)	18A0908X012
	Filament packing ring for 9.5 mm (3/8 inch) and NPS 2 with 12.7 mm (1/2 inch) stem (4 req'd)	1P3905X0172
	Ribbon packing ring for NPS 3 and 4 with 12.7 mm (1/2 inch) stem (4 req'd)	18A0918X012
	Filament packing ring for NPS 3 and 4 with 12.7 mm (1/2 inch) stem (4 req'd)	14A0915X042
8	Spring	
8	Lantern ring	
8	ENVIRO-SEAL bellows seal spring	
8	ENVIRO-SEAL bellows seal spacer	
10	Special washer	
11*	Packing Box Ring, S31600	
	9.5 mm (3/8 inch) stem,	1J873135072
	12.7 mm (1/2 inch) stem,	1J873235072
	19.1 mm (3/4 inch) stem,	1J873335072
	25.4 mm (1-inch) stem,	1J873435072
	31.8 mm (1-1/4 inch) stem,	1J873535072
12*	Upper Wiper, felt	
	9.5 mm (3/8 inch) stem	1J872606332
	12.7 mm (1/2 inch) stem	1J872706332
	19.1 mm (3/4 inch) stem	1J872806332
	25.4 mm (1-inch) stem	1J872906332
	31.8 mm (1-1/4 inch) stem	1J873006332
12*	ENVIRO-SEAL bellows seal upper wiper	
	For 9.5 mm (3/8 inch) and NPS 2 with 12.7 mm (1/2 inch) stem	18A0868X012
	For NPS 3 and 4 with 12.7 mm (1/2 inch) stem	18A0870X012
13	Packing Follower	
13*	ENVIRO-SEAL bellows seal bushing	
	For 9.5 mm (3/8 inch) stem (1 req'd), for NPS 2 with 12.7 mm (1/2 inch) stem (2 req'd)	
	S31600/PTFE	18A0820X012
	R30006	18A0819X012
	S31600/Cr Coated	11B1155X012
	For NPS 3 and 4 with 12.7 mm (1/2 inch) stem (1 req'd)	
	S31600/PTFE	18A0824X012
	R30006	18A0823X012
	S31600/Cr Coated	11B1157X012
13*	ENVIRO-SEAL bellows seal bushing/liner	
	For 9.5 mm (3/8 inch) stem (1 req'd), for NPS 2 with 12.7 mm (1/2 inch) stem (2 req'd)	
	N10276 bushing, PTFE/glass liner	12B2713X012
	N10276 bushing, PTFE/carbon liner	12B2713X042
	For NPS 3 and 4 with 12.7 mm (1/2 inch) stem (1 req'd)	
	N10276 bushing, PTFE/glass liner	12B2715X012
	N10276 bushing, PTFE/carbon liner	12B2715X042
14	Pipe Plug	
14	Lubricator	
14	Lubricator/Isolating Valve	
15	Yoke Locknut	
15	ENVIRO-SEAL bellows seal Locknut	
16	Pipe Plug	
16	ENVIRO-SEAL bellows seal pipe plug	
20*	ENVIRO-SEAL bellows seal stem/bellows assembly	
	1 Ply Bellows	
	S31600 trim mat'l, N06625 bellows mat'l	
	NPS 1 w/ 9.5 mm (3/8 inch) stem	32B4224X012
	NPS 1-1/2 w/ 9.5 mm (3/8 inch) stem	32B4225X012
	NPS 2 w/ 12.7 mm (1/2 inch) stem	32B4226X012
	NPS 3 w/ 12.7 mm (1/2 inch) stem	32B4227X012
	NPS 4 w/ 12.7 mm (1/2 inch) stem	32B4228X012
	N06022 trim mat'l, N06022 bellows mat'l	
	NPS 1 w/ 9.5 mm (3/8 inch) stem	32B4224X022
	NPS 1-1/2 w/ 9.5 mm (3/8 inch) stem	32B4225X022
	NPS 2 w/ 12.7 mm (1/2 inch) stem	32B4226X022
	NPS 3 w/ 12.7 mm (1/2 inch) stem	32B4227X022
	NPS 4 w/ 12.7 mm (1/2 inch) stem	32B4228X022
	2 Ply Bellows	
	S31600 trim mat'l, N06625 bellows mat'l	
	NPS 1 w/ 9.5 mm (3/8 inch) stem	32B4224X032
	NPS 1-1/2 w/ 9.5 mm (3/8 inch) stem	32B4225X032
	NPS 2 w/ 12.7 mm (1/2 inch) stem	32B4226X032
	NPS 3 w/ 12.7 mm (1/2 inch) stem	32B4227X032

*Recommended spare parts

Keys 6*, 7*, 8, and 10 Packing Box Parts[1]

DESCRIPTION			KEY NO.	STEM DIAMETER, mm (INCHES)				
				9.5 (3/8)	12.7 (1/2)	19.1 (3/4)	25.4 (1)	31.8 (1-1/4)
PTFE V-Ring Packing	Packing Set, PTFE (1 req'd for single, 2 req'd for double)[2]		6	1R290001012	1R290201012	1R290401012	1R290601012	1R290801012
	Spring, Stainless Steel (for single only)		8	1F125437012	1F125537012	1F125637012	1D582937012	1D387437012
	Lantern Ring, Stainless Steel (for double only)		8	1F364135072	1J962335072	0N028435072	0U099735072	0W087135072
	Quantity required	Double	– – –	1	2	1	1	1
	Special Washer, Stainless Steel (for single only)		10	1F125236042	1F125136042	1F125036042	1H982236042	1H995936042
PTFE/ Composition Packing	Packing Ring, PTFE composition		7	1F3370X0012	1E319001042	1E319101012	1D7518X0012	1D7520X0012
	Quantity required	Double	– – –	7	10	8	8	8
	Lantern Ring, Stainless Steel (1 required)		8	1F364135072	1J962335072	0N028435072	0U099735072	0W087135072
Graphite Ribbon/ Filament	Graphite Ribbon Ring		7	1V3160X0022	1V3802X0022	1V2396X0022	1U6768X0022	1V5666X0022
	Quantity required	Single	– – –	2	2	2	2	2
		Double	– – –	3	3	3	3	3
	Graphite Filament Ring		7	1F3370X0322	1E3190X0222	1E3191X0282	1D7518X0132	1D7520X0162
	Quantity required	Single	– – –	2	2	3	3	3
		Double	– – –	4	4	5	5	5
	Lantern Ring		8	1F364135072	1J962335072	0N028435072	0U099735072	0W087135072
	Quantity required	Single	– – –	2	3	2	2	2
		Double	– – –	1	2	1	1	1
	Warning Tag			11B9513X012	11B9513X012	11B9513X012	11B9513X012	11B9513X012

1. For ENVIRO-SEAL or HIGH-SEAL packing box parts, see instruction manual ENVIRO-SEAL Packing System for Sliding-Stem Valves, D101642X012 or HIGH-SEAL Live-Loaded Packing System, D101453X012.
2. Key 6 for double construction contains one extra packing ring for the 9.5 mm (3/8 inch) stem and one extra lower wiper for all sizes. Discard upon assembly.

Key	Description	Part Number
	NPS 4 w/ 12.7 mm (1/2 inch) stem	32B4228X032
	N06022 trim mat'l, N06022 bellows mat'l	
	NPS 1 w/ 9.5 mm (3/8 inch) stem	32B4224X042
	NPS 1-1/2 w/ 9.5 mm (3/8 inch) stem	32B4225X042
	NPS 2 w/ 12.7 mm (1/2 inch) stem	32B4226X042
	NPS 3 w/ 12.7 mm (1/2 inch) stem	32B4227X042
	NPS 4 w/ 12.7 mm (1/2 inch) stem	32B4228X042
22*	ENVIRO-SEAL bellows seal bonnet gasket (graphite/S31600)	
	NPS 1/2 through 1-1/4	12B6316X022
	NPS 1-1/2	12B6317X022
	NPS 2	12B6318X022
	NPS 3	12B6319X022
	NPS 4	12B6320X022
24	ENVIRO-SEAL bellows seal adaptor	
25	Cap Screw	
26	Hex Nut	
27	Pipe Nipple for lubricator/isolating valve	
28	ENVIRO-SEAL bellows seal nameplate, warning	
29	ENVIRO-SEAL bellows seal drive screw	
34	Lubricant, Anti-Seize (not included with valve)	
36*	ENVIRO-SEAL bellows seal pin	12B3951X012
37	ENVIRO-SEAL bellows seal warning tag	
38	ENVIRO-SEAL bellows seal tie	
39	ENVIRO-SEAL bellows seal thrust ring	

*Recommended spare parts

Figure 14. Typical Bonnets

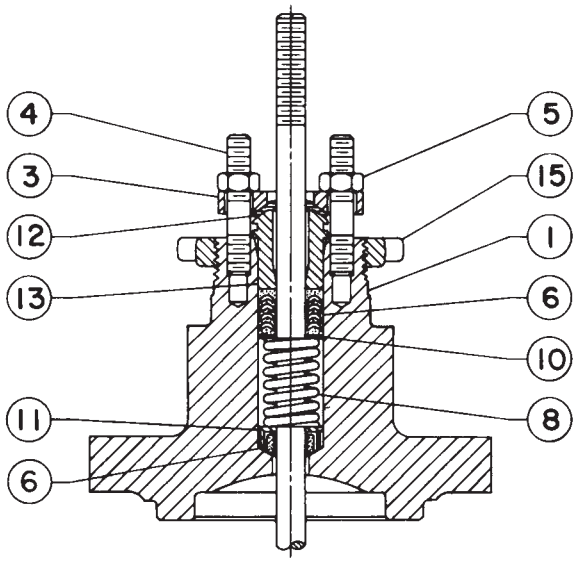

PLAIN BONNET

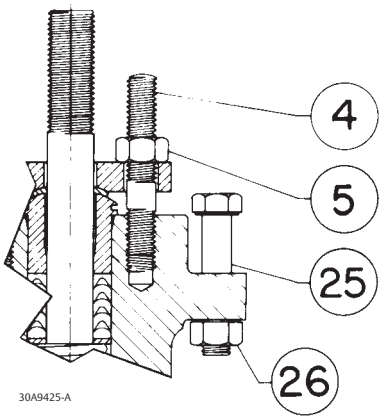

DETAIL OF 127 mm (5-INCH) YOKE BOSS ACTUATOR BOLTING

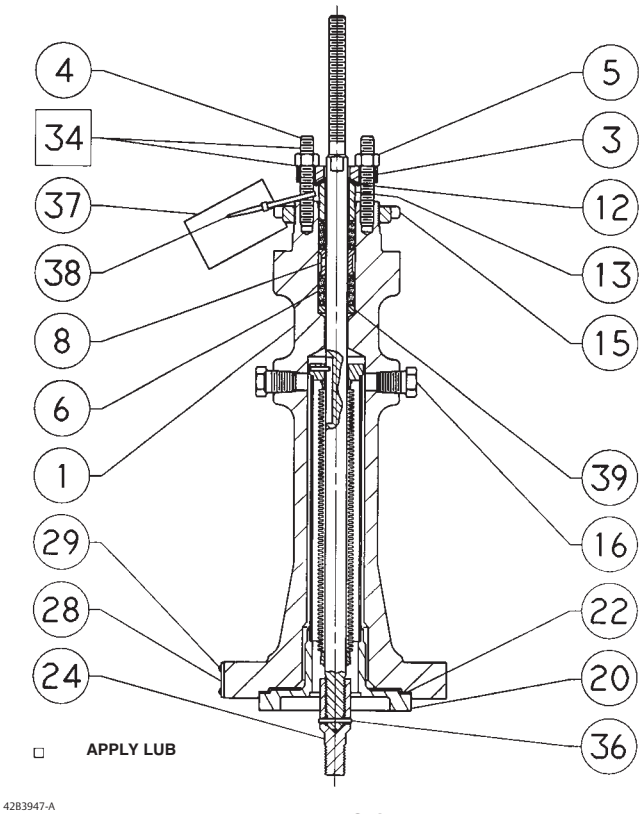

ENVIRO-SEAL BELLOWS SEAL BONNET

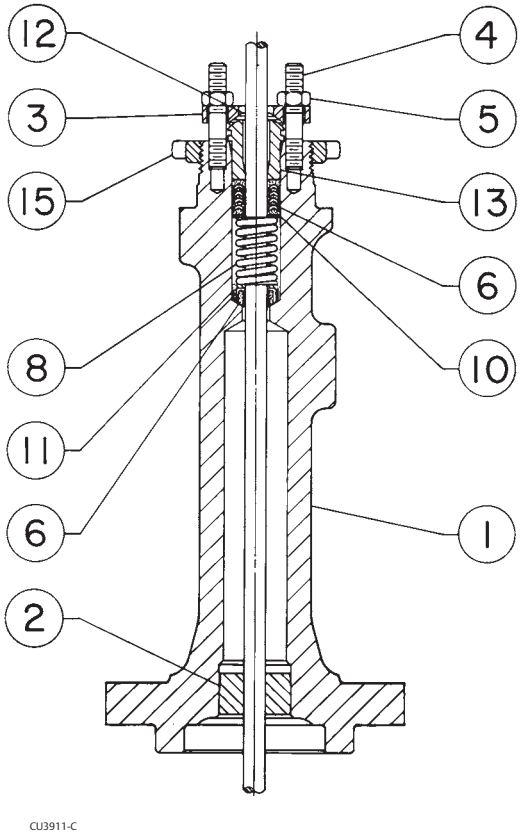

STYLE 1 OR 2 EXTENSION BONNET

Figure 15. Alternate Configurations

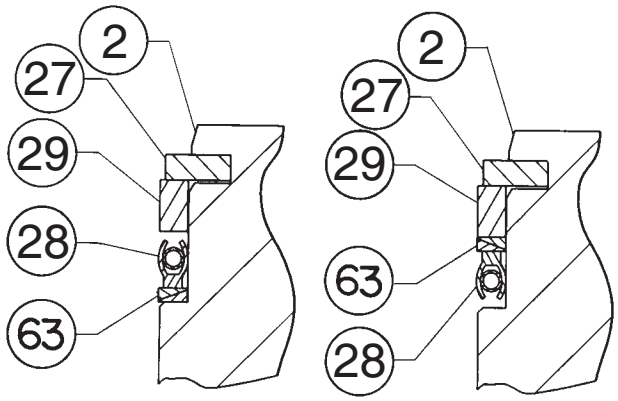

21B2120-A
A6137

FLOW UP **FLOW DOWN**

NPS 1 TO 8 ET USING PEEK ANTI-EXTRUSION RINGS

Key	Description	Part Number
	Valve Body (figures 16 through 21)	
1	Valve Body	
	If you need a valve body as a replacement part, order by valve size, serial number, and desired material.	
2*	Valve plug	see following table
3*	Cage	see following table
4	Trim adaptor	
5	Trim adaptor	
7*	Valve plug stem	see following table
8*	Pin, 316 Stainless Steel	
	9.5 mm (3/8 inch) stem	1V322635072
	12.7 mm (1/2 inch) stem	1V322735072
	19.1 mm (3/4 inch) stem	1V326035072
	25.4 mm (1 inch) or 31.8 mm (1-1/4 inch) stem	1V334035072
9*	Liner	see following table
9*	Seat Ring	see following table
10*	Bonnet Gasket	see following table
11*	Cage Gasket	see following table
12*	Spiral-Wound Gasket	see following table
13*	Seat Ring or Liner Gasket	see following table
14*	Adaptor Gasket	see following table
15	Cap Screw	
15	Stud	
16	Nut	
17	Pipe Plug, for use in valves with drain tapping only	
18	Flow Direction Arrow	
19	Drive Screw, Stainless Steel	
20*	Adaptor Gasket	see following table
21*	Seat Disk Retainer	see following table
22*	Disk Seat	see following table
23*	Disk	see following table
24*	Seal Ring (EAT)	see following table
25*	Backup Ring (EAT)	see following table
26	Load Ring (for NPS 8 ET only)	
27*	Retaining Ring	see following table
27*	Shim (EAT)	see following table
28*	Seal Ring (ET)	see following table
29*	Backup Ring (ET)	see following table
31*	Whisper Trim III Cage Retainer for Levels A3, B3 & C3 (NPS 6 ET only)	
	410 Stainless steel	22A3255X012
	WCC steel (ENC)	22A3256X012
	316 Stainless Steel (ENC)	22A3256X022
	316 Stainless Steel w/CoCr-A bore	22A3257X012
	316 Stainless Steel (Cr Cr)	31A9792X012
31*	Whisper Trim III Cage Retainer & Baffle Ass'y for Level D3 (NPS 6 ET only)	
	410 Stainless Steel retainer & steel baffle	22A3258X012
	WCC steel (ENC) retainer & steel baffle	22A3258X022
	316 Stainless Steel (ENC) retainer & steel baffle	22A3258X052
	316 Stainless Steel w/CoCr-A retainer & steel baffle	22A3258X032
	316 Stainless steel (ENC) retainer & 316 stainless steel baffle	22A3258X042
	316 Stainless Steel (Cr Cr) retainer & 316 Stainless Steel baffle	22A3258X062
31*	Cavitrol III Cage Retainer, 316 Stainless Steel ET only)	
	NPS 1 valve (required w/2-stage cage only)	24A4258X012
	NPS 1-1/2 valve	24A4259X012
	NPS 2 valve	24A3040X012
	NPS 2-1/2 valve	24A4260X012
	NPS 3 valve	23A9451X012
	NPS 4 valve	23A5814X012
	NPS 6 valve	23A5801X012
	NPS 8 valve	23A9447X012
32	Whisper Trim III Bonnet Spacer (NPS 6 ET only)	
51*	Shim	see following table
54	Wire	
63*	Anti-Extrusion Ring	see following table

*Recommended spare parts

Figure 16. NPS 1 Through 6 Fisher ET and EAT Valves

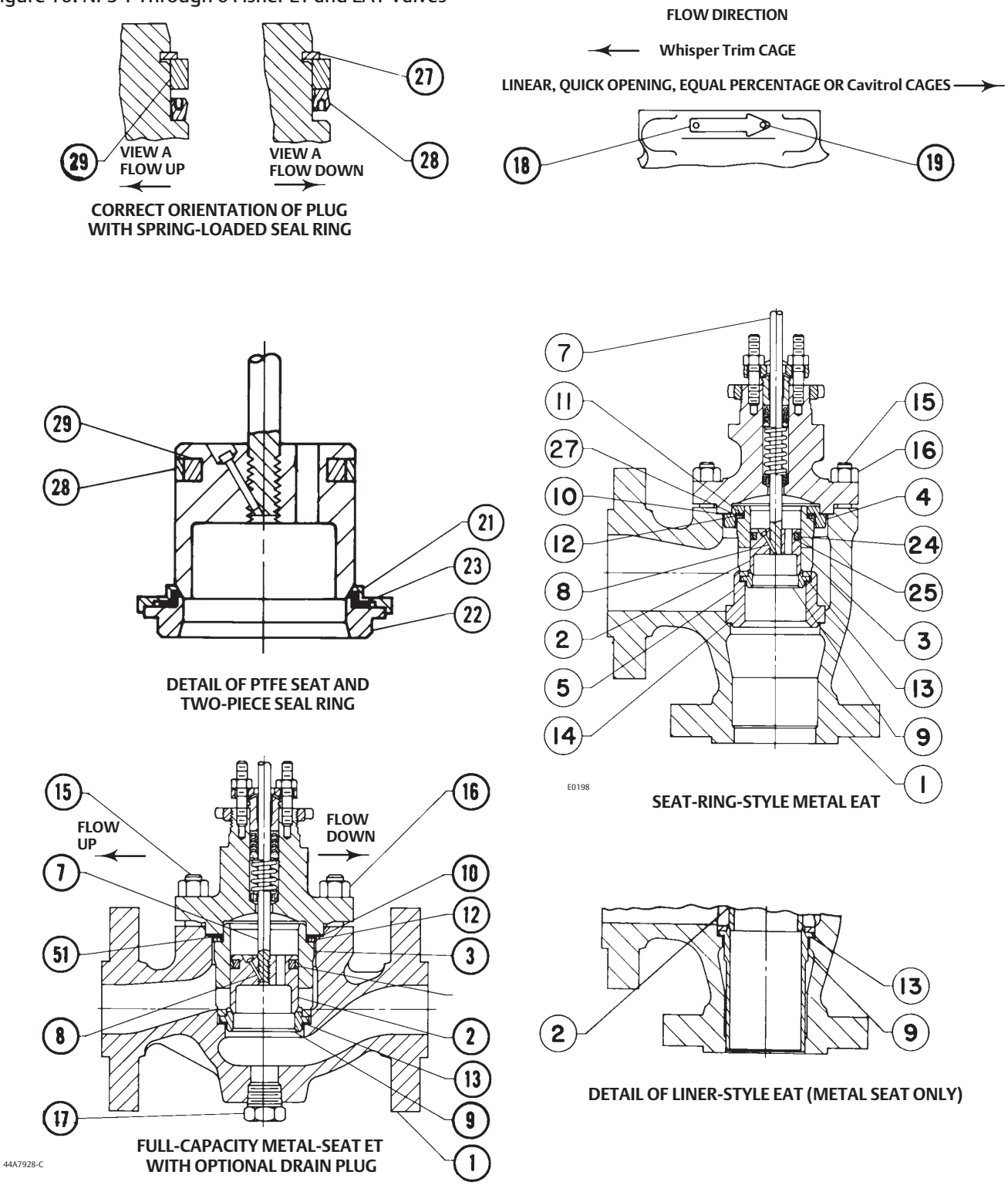

Figure 17. Fisher ET Valve Assembly with Whisper Trim III Cage and Optional Drain Plug

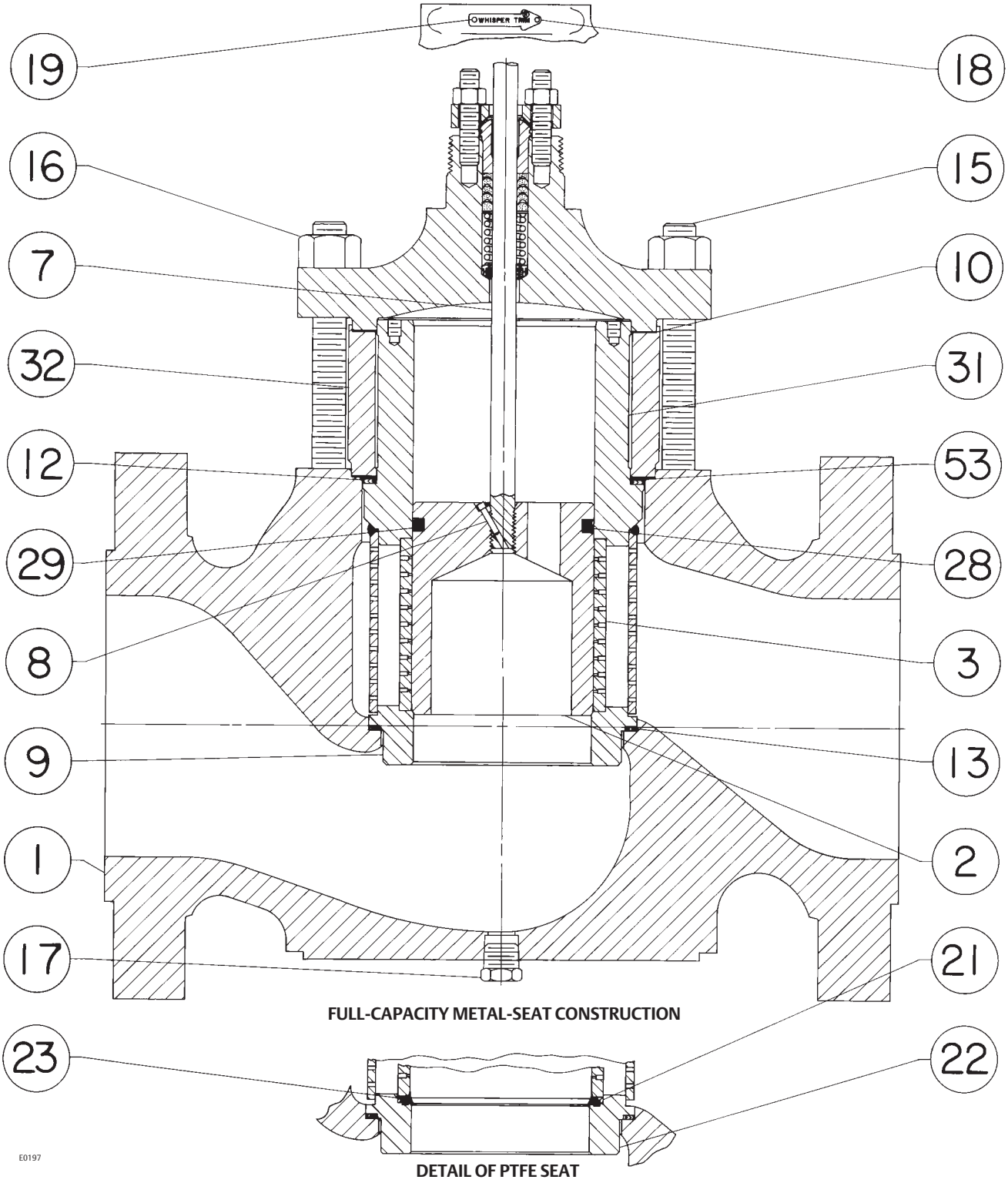

Figure 18. Fisher ET Valve Assembly with WhisperFlo Cage and Optional Drain Plug

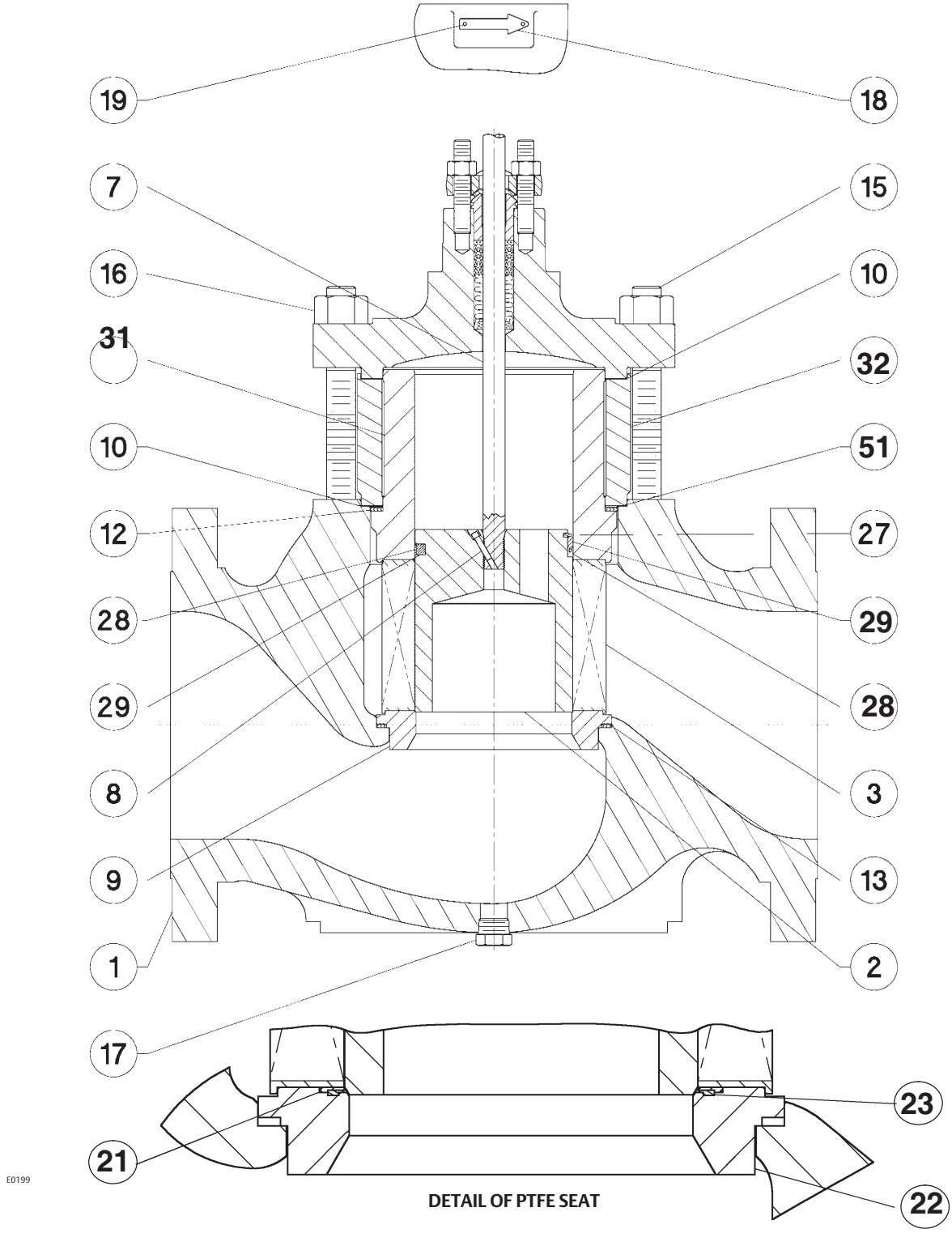

Figure 19. NPS 8 Fisher ET Valve Assembly with WhisperFlo Cage and Optional Drain Plug

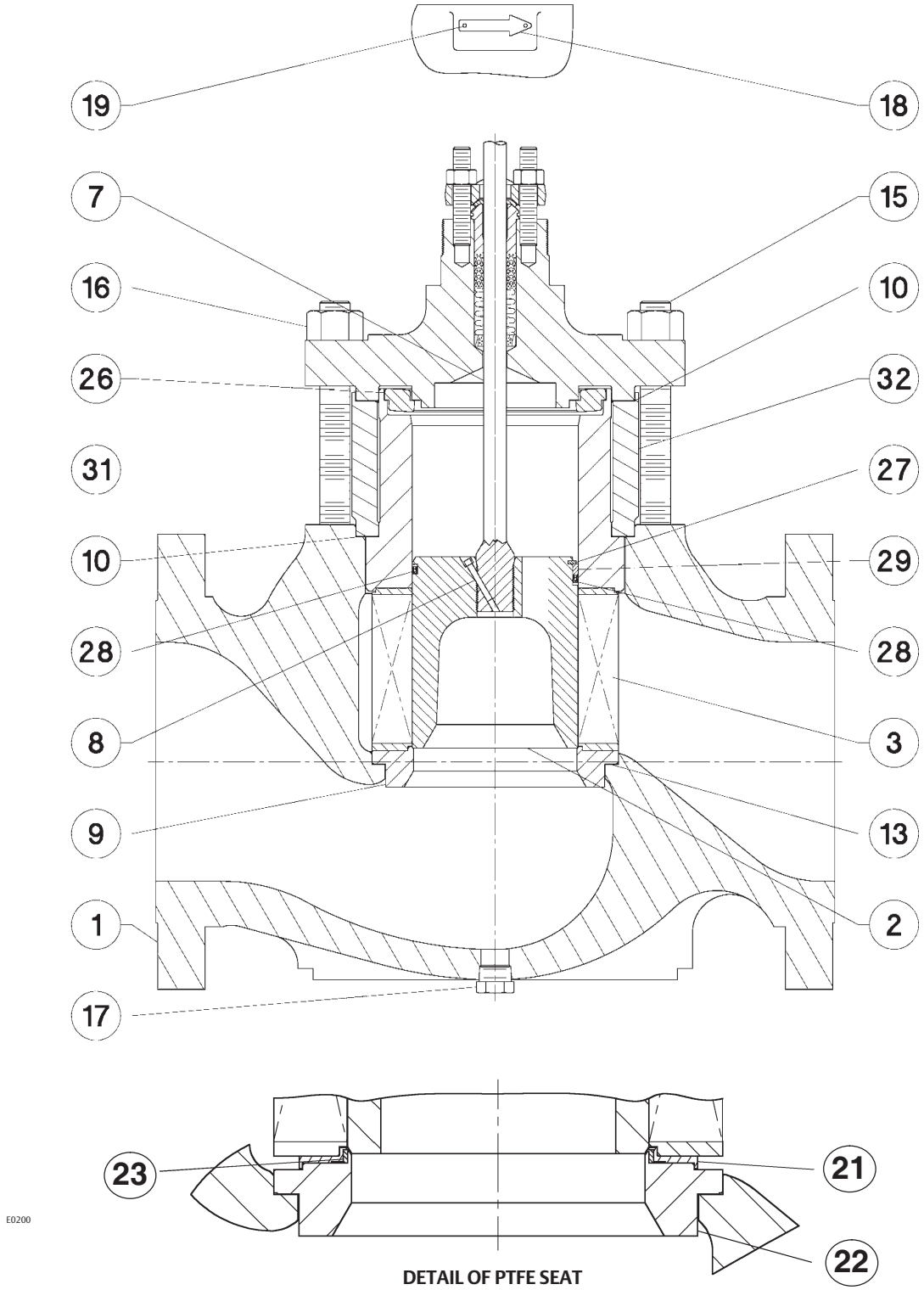

Figure 20. Details of Cavitrol III and NPS 8 Fisher ET Valves with Optional Drain Plug

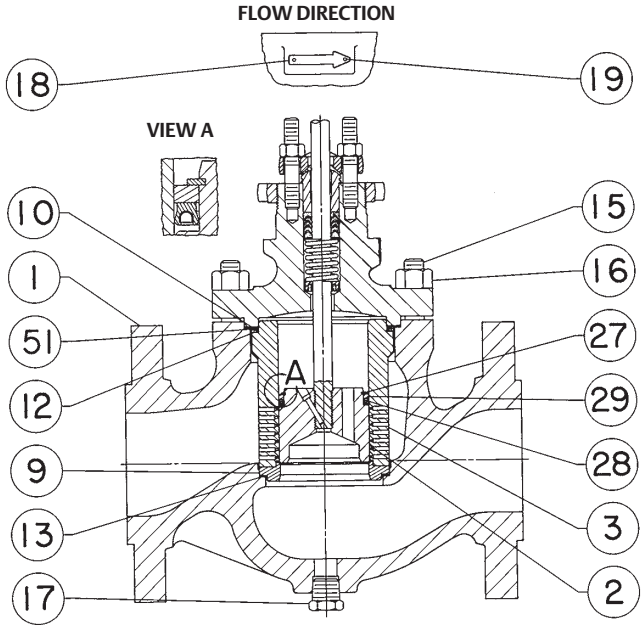

1-STAGE Cavitrol III CONSTRUCTIONS THRU NPS 6 SHOWING CORRECT ORIENTATION OF PLUG WITH SPRING-LOADED SEAL RING

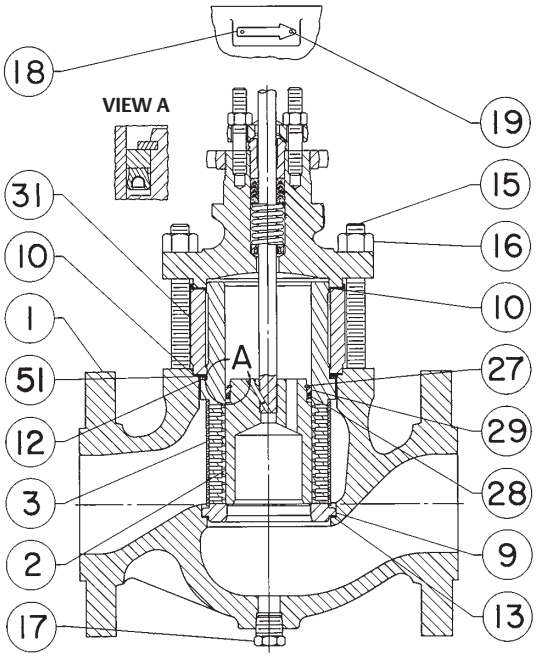

NPS 1 THROUGH 6 VALVE SIZE

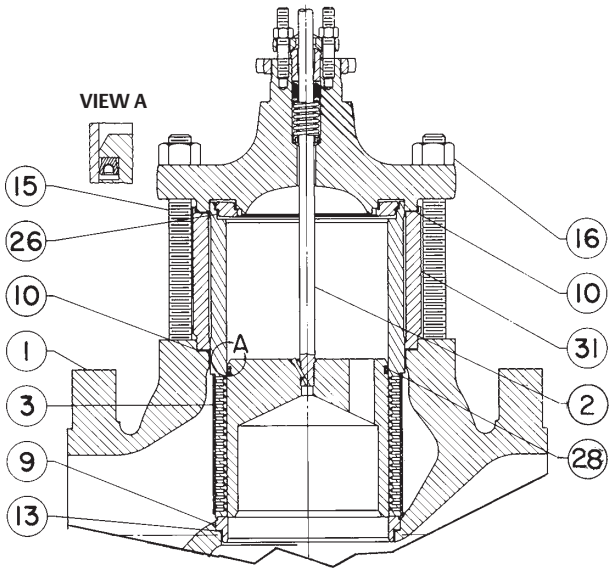

NPS 8 VALVE SIZE

PLUG AND SEAL RING WITH SPRING LOADING SHOWN IN CORRECT ORIENTATION FOR 2-STAGE Cavitrol III CAGE

Figure 21. Gasket Set Detail shown with Optional Drain Plug

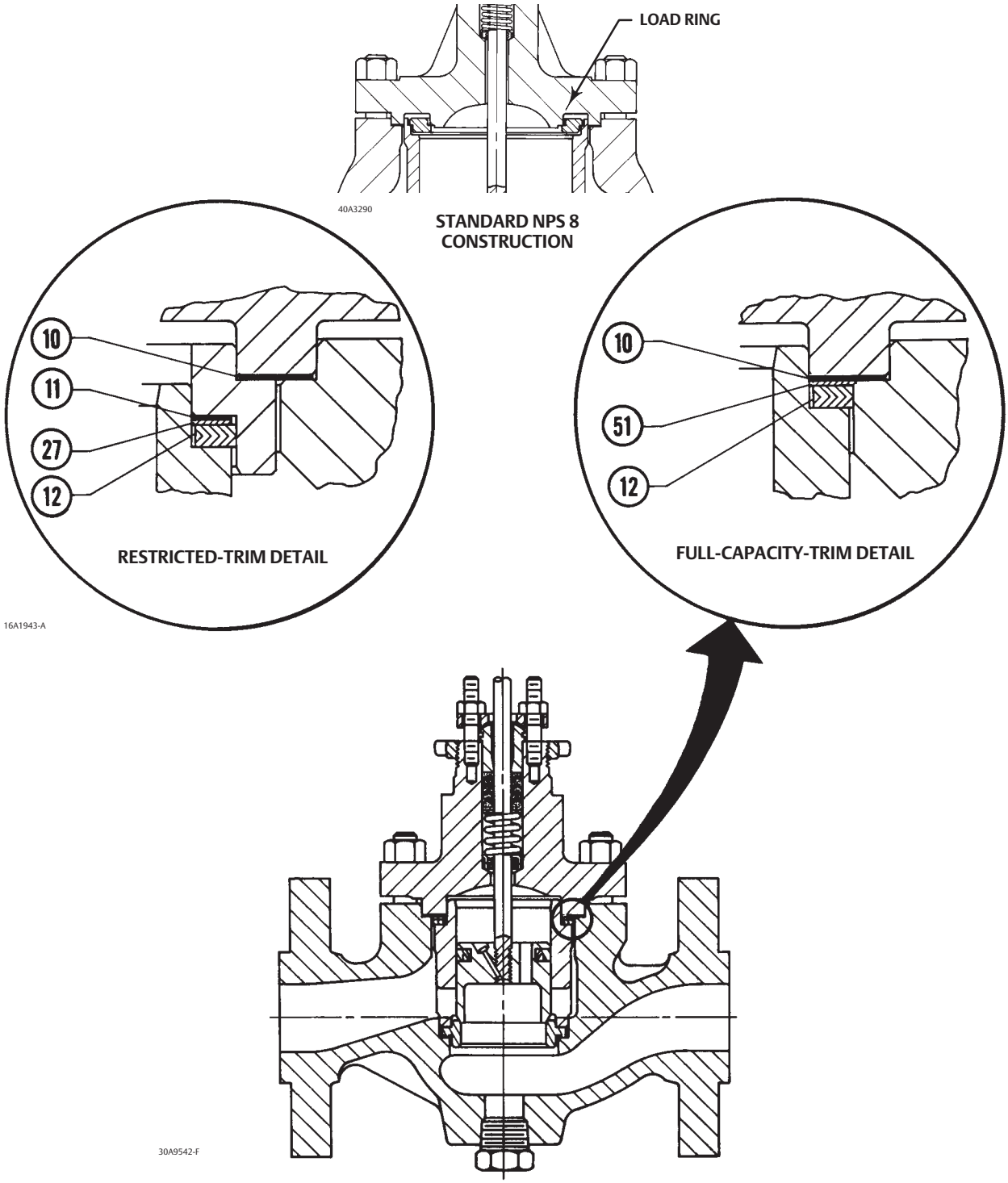

Actuator Groups

<table>
<tr><th rowspan="2">Group 1
54 mm (2-1/8 inches),
71 mm (2-13/16 inches),
or 90 mm (3-9/16 inches) Yoke Boss</th><th>Group 100
127 mm (5 inches) Yoke Boss
3 inches maximum travel</th><th>Group 401
90.5 mm (3-9/16 inches) Yoke Boss
3.25 to 4 inches maximum travel</th><th>Group 404
127 mm (5 inches) Yoke Boss
4 inches maximum travel</th></tr>
<tr><td rowspan="6">585C
657
1008</td><td rowspan="2">657
657 MO
657-4
657-4 MO
667
667 MO
667-4
667-4 MO</td><td>667
667-4</td></tr>
<tr><td>Group 405
127 mm (5 inches) Yoke Boss
4 inches maximum travel</td></tr>
<tr><td rowspan="2">585C
1B
618
644 & 645
657 & 667—76.2 mm (3 inches) maximum travel
1008—71.4 mm (2-13/16 inches) Yoke Boss</td><td>657 MO
657-4 MO</td></tr>
<tr><td>Group 402
90.5 mm (3-9/16 inches) Yoke Boss
4 inches maximum travel</td><td>Group 406
127 mm (5 inches) Yoke Boss
4 inches maximum travel</td></tr>
<tr><td>Group 101
127 mm (5 inches) Yoke Boss
3 inches maximum travel</td><td>457-7
585C</td><td>667 MO
667-4 MO</td></tr>
<tr><td>667</td><td>Group 403
90.5 mm (3-9/16 inches) Yoke Boss
4 inches maximum travel</td><td>Group 407
127 mm (5 inches) Yoke Boss
4 inches maximum travel</td></tr>
<tr><td>Group 400
71.4 mm (2-13/16 inches)
Yoke Boss
4 inches maximum travel</td><td>585C
1008</td><td>585C
657</td></tr>
<tr><td rowspan="2">585C</td><td>Group 801
90.5 mm (3-9/16 inches) Yoke Boss
8 inches maximum travel</td><td>Group 802
127 mm (5 inches) Yoke Boss
8 inches maximum travel</td></tr>
<tr><td>585C</td><td>585C</td></tr>
</table>

Key 2* Valve Plug for Constructions with Two-Piece Seal Ring

VALVE SIZE, NPS		STEM DIAMETER		416 STAINLESS STEEL HARDENED (STD)	316 STAINLESS STEEL(1)	316 STAINLESS STEEL w/CoCr-A ON SEAT(1)	316 STAINLESS STEEL w/CoCr-A ON SEAT & GUIDE(1)
ET	EAT	mm	Inches				
1, 1-1/4, or 1-1/2 x 1	1 or 2 x 1	9.5 12.7	3/8 1/2	1V657146172 1V657246172	1V657135072 1V657235072	11A5315X012 11A5316X012	11A5317X012 11A5318X012
1-1/2	2	9.5 12.7	3/8 1/2	1V657346172 1V657446172	1V657335072 1V657435072	11A5321X012 10A4439X012	10A4438X012 10A4611X012
2 or 3 x 2	4 x 2	12.7 19.1	1/2 3/4	1V657546172 1V657646172	1V657535072 1V657635072	11A5324X012 11A5325X012	11A5326X012 11A5327X012
2 x 1	- - -	12.7	1/2	1V657246172	1V657235072	11A5316X012	11A5318X012
2-1/2 or 4 x 2-1/2	3 or 6 x 2-1/2	12.7 19.1	1/2 3/4	1V657746172 1V657846172	1V657735072 1V657835072	11A5330X012 11A5331X012	11A5332X012 11A5333X012
2-1/2 x 1-1/2	3 x 1-1/2	12.7	1/2	1V657446172	1V657435072	10A4439X012	10A4611X012
3	4	12.7 19.1	1/2 3/4	1V657946172 1V658046172	1V657935072 1V658035072	11A5336X012 11A5014X012	11A5337X012 11A5338X012
4	6	12.7 19.1 25.4	1/2 3/4 1	1V658146172 1V6582X0022 1V658346172	1V658135072 1V6582X0072 1V658335072	11A5341X012 11A5342X012 11A5343X012	11A5344X012 11A5345X042 11A5346X012
6	- - -	19.1 25.4 31.8	3/4 1 1-1/4	1V658446172 1V658546172 1V658646172	1V658435072 1V658535072 1V658635072	11A5350X012 10A5107X012 10A5108X012	11A5351X012 20A0103X012 20A4608X012

1. Not for use with 17-4PH stainless steel cages above 210°C (410°F).

*Recommended spare parts

Keys 2*, 7*, and 8* Valve Plug and Stem Assembly for Plain Bonnet with Two-Piece Seal Ring

VALVE SIZE, NPS		STEM DIAMETER		416 STAINLESS STEEL HARDENED (STD)	316 STAINLESS STEEL(1)	316 STAINLESS STEEL w/CoCr-A ON SEAT(1)	316 STAINLESS STEEL w/CoCr-A ON SEAT & GUIDE(1)
ET	EAT	mm	Inches				
1 or 1-1/4	1	9.5 12.7	3/8 1/2	1V6571X0032 1V6572X0022	1V6571X0052 1V6572X0062	11A5315X032 11A5316X022	11A5317X042 11A5318X042
1-1/2	2	9.5 12.7	3/8 1/2	1V6573X0042 1V6574X0012	1V6573X0052 1V6574X0032	11A5321X022 - - -	10A4438X022 10A4611X042
1-1/2 x 1	2 x 1	9.5 12.7	3/8 1/2	1V6571X0042 1V6572X0042	1V6571X0092 - - -	- - - - - -	11A5317X072 11A5318X032
2 or 3 x 2	4 x 2	12.7 19.1	1/2 3/4	1V6575X0052 1V6576X0012	1V6575X0062 - - -	11A5324X022 - - -	11A5326X022 11A5327X032
2 x 1	- - -	12.7	1/2	1V6572X0022	1V6572X0062	11A5316X022	11A5318X042
2-1/2 or 4 x 2-1/2	3 or 6 x 2-1/2	12.7 19.1	1/2 3/4	1V6577X0042 1V6578X0012	1V6577X0062 1V6578X0022	11A5330X022 11A5331X022	11A5332X022 - - -
2-1/2 x 1-1/2	3 x 1-1/2	12.7	1/2	1V6574X0012	1V6574X0032	- - -	10A4611X112
3	4	12.7	1/2	1V6579X0092	1V6579X0112	11A5336X032	11A5337X082
4	6	12.7 19.1	1/2 3/4	1V6581X0042 1V6582X0022	1V6581X0052 1V6582X0072	11A5341X032 - - -	11A5344X022 11A5345X042
6	- - -	19.1	3/4	1V6584X0042	1V6584X0062	11A5350X032	21A5351X062

1. Not for use with 17-4PH stainless steel cages above 210°C (410°F).

Keys 2*, 7*, and 8* Valve Plug and Stem Assembly for Style 1 Extension Bonnet with Two-Piece Seal Ring

VALVE SIZE, NPS		STEM DIAMETER		416 STAINLESS STEEL HARDENED (STD)	316 STAINLESS STEEL(1)	316 STAINLESS STEEL w/CoCr-A ON SEAT(1)	316 STAINLESS STEEL w/CoCr-A ON SEAT & GUIDE(1)
ET	EAT	mm	Inches				
1 or 1-1/4	1	9.5 12.7	3/8 1/2	1V6571X0072 1V6572X0032	1V6571X0062 - - -	- - - 11A5316X032	11A5317X082 - - -
1-1/2	2	9.5 12.7	3/8 1/2	1V6573X0072 1V6574X0052	- - - - - -	11A5321X042 - - -	10A4438X032 10A4611X112
1-1/2 x 1	2 x 1	9.5 12.7	3/8 1/2	1V6571X0102 1V6572X0152	- - - - - -	- - - - - -	11A5317X052 - - -
2 or 3 x 2	4 x 2	12.7	1/2	1V6575X0182	1V6575X0122	11A5324X042	11A5326X062
2 x 1	- - -	12.7	1/2	1V6572X0032	- - -	11A5316X032	- - -
2-1/2 or 4 x 2-1/2	3 or 6 x 2-1/2	12.7	1/2	1V6577X0052	- - -	- - -	11A5332X202
2-1/2 x 1-1/2	3 x 1-1/2	12.7	1/2	1V6574X0052	- - -	- - -	10A4611X112
3	4	12.7	1/2	1V6579X0082	1V6579X0072	- - -	11A5337X062
4	6	12.7	1/2	1V6581X0072	1V6581X0062	- - -	11A5344X052
6	- - -	19.1	3/4	1V6584X0052	1V6584X0112	- - -	21A5351X052

1. Not for use with 17-4PH stainless steel cages above 210°C (410°F).

*Recommended spare parts

Key 2* Valve Plug for Spring-Loaded Seal Ring Constructions

VALVE SIZE, NPS		STEM DIAMETER		416 STAINLESS STEEL HARDENED	316 STAINLESS STEEL(1)	316 STAINLESS STEEL w/CoCr-A SEAT & GUIDE(1)
ET	EAT	mm	Inches			
1, 1-1/4, or 1-1/2 x 1	1	9.5	3/8	20A4103X012	20A4103X022	20A4104X012
1-1/2 or 2-1/2 x 1-1/2	2 or 3 x 1-1/2	9.5 12.7	3/8 1/2	20A6711X012 20A4150X012	20A6711X022 20A4150X022	22A5941X012 20A4151X012
2 or 3 x 2	4 x 2	12.7 19.1	1/2 3/4	20A4097X012 20A4098X012	20A4097X022 20A4098X022	20A4099X012 20A4100X012
2-1/2 or 4 x 2-1/2	3 or 6 x 2-1/2	12.7 19.1	1/2 3/4	20A9533X012 20A4144X012	20A9533X022 20A4144X022	20A9534X012 20A4146X012
3	4	12.7 19.1	1/2 3/4	20A5414X012 20A5342X012	20A5414X022 20A5342X022	22A3458X012 20A5344X012
4	6	12.7 19.1 25.4	1/2 3/4 1	20A2641X012 20A4194X012 20A4195X012	20A2641X022 20A4194X0A2 20A4195X032	21A0187X012 20A4197X012 20A4198X012
6	- - -	19.1 25.4	3/4 1	20A2642X012 20A5621X012	20A2642X022 20A5621X022	21A8443X012 20A6706X012
8	- - -	19.1 25.4 31.8	3/4 1 1-1/4	21A5356X012 21A5357X012 21A5358X012	21A5356X022 21A5357X022 21A5358X022	21A5362X012 21A5363X012 21A5364X012

1. Not for use with 17-4PH stainless steel cages above 210°C (410°F).

Keys 2*, 7*, and 8* Valve Plug and Stem Assembly for Plain Bonnet for Spring-Loaded Seal Ring Constructions

VALVE SIZE, NPS		STEM DIAMETER		416 STAINLESS STEEL HARDENED	316 STAINLESS STEEL(1)	316 STAINLESS STEEL w/CoCr-A SEAT & GUIDE(1)
ET	EAT	mm	Inches			
1, 1-1/4	1	9.5	3/8	20A4103X052	- - -	- - -
1-1/2	2	9.5 12.7	3/8 1/2	20A6711X032 20A4150X062	20A6711X042 - - -	22A5941X022 - - -
1-1/2 x 1	2 x 1	9.5	3/8	20A4103X042	- - -	- - -
2 or 3 x 2	4 x 2	12.7	1/2	20A4097X062	20A4097X182	20A4099X102
2-1/2 or 4 x 2-1/2	3 or 6 x 2-1/2	12.7	1/2	20A9533X052	20A9533X062	20A9534X092
2-1/2 x 1-1/2	3 x 1-1/2	12.7	1/2	20A4150X062	- - -	- - -
3	4	12.7 19.1	1/2 3/4	20A5414X062 20A5342X082	20A5414X052 - - -	22A3458X022 20A5344X042
4	6	12.7 19.1	1/2 3/4	20A2641X042 20A4194X052	20A2641X162 - - -	- - - - - -
6	- - -	19.1	3/4	20A2642X052	20A2642X062	21A8443X032
8	- - -	19.1	3/4	21A5356X052	21A5356X132	21A5362X062

1. Not for use with 17-4PH stainless steel cages above 210°C (410°F).

Key 2* 1-Stage Cavitrol III Valve Plug (Fisher ET only)

VALVE SIZE, NPS	STEM DIAMETER		420 STAINLESS STEEL	316 STAINLESS STEEL w/CoCr-A ON SEAT & GUIDE(1)
	mm	Inches		
1	12.7	1/2	28A1001X012	28A2226X012
1-1/2	12.7	1/2	28A1002X012	28A2227X012
2	12.7 19.1	1/2 3/4	28A1003X012 28A1004X012	28A2228X012 28A2229X012
2-1/2	12.7 19.1	1/2 3/4	28A1005X012 28A1006X012	28A2230X012 28A2231X012
3	12.7 19.1	1/2 3/4	28A1007X012 28A1008X012	28A2232X012 28A2233X012
4	19.1 25.4	3/4 1	28A1010X012 28A1011X012	28A2234X012 28A2235X012
6	25.4 31.8	1 1-1/4	28A1013X012 28A1014X012	28A2236X012 28A2237X012
8	25.4 31.8	1 1-1/4	28A1016X012 28A1017X012	28A2238X012 28A2239X012

1. Not for use with 17-4PH stainless steel cages above 210°C (410°F).

*Recommended spare parts

Key 2* 2-Stage Cavitrol III Valve Plug & Stem Ass'y (Fisher ET only)

VALVE SIZE, NPS	TRAVEL		ACTUATOR GROUP (FROM PRECEDING TABLE)	STEM DIAMETER		316 STAINLESS STEEL STEM		17-4PH STAINLESS STEEL STEM	
	mm	Inches		mm	Inches	420 HT Valve Plug	316 Stainless Steel Valve Plug w/CoCr-A Seat & Guide	420 HT Valve Plug	316 Stainless Steel Valve Plug w/CoCr-A Seat & Guide
1	25	1	1	12.7	1/2	24A5265X022	24A5519X022	– – –	– – –
1-1/2	38	1.5	1	12.7	1/2	24A5266X022	24A5286X022	– – –	– – –
2	51	2	1	12.7 19.1	1/2 3/4	24A3038X022 24A5550X022	24A5287X022 24A5551X022	24A3038X032 – – –	24A5287X032 – – –
2-1/2	64	2.5	1 400 1, 402, 403	12.7 12.7 19.1	1/2 1/2 3/4	24A5267X022 24A5267X032 24A5268X022	24A5288X022 24A5288X032 24A5289X022	24A5267X042 24A5267X052 – – –	24A5288X042 24A5288X052 – – –
3	76	3	1, 400 1, 402, 403	12.7 19.1	1/2 3/4	24A5269X022 23A9452X012	24A5290X022 24A5291X022	24A5269X032 – – –	24A5290X032 – – –
4	76 102 76	3 4 3	1, 402, 403 401, 402, 403 100, 101	19.1 19.1 25.4	3/4 3/4 1	23A5818X022 23A5818X032 24A5270X022	24A5292X022 24A5292X032 24A5293X022	– – – – – – – – –	– – – – – – – – –
	102 102 102	4 4 4	404 405, 406 407	25.4 25.4 25.4	1 1 1	24A5270X022 24A5270X042 24A5270X032	24A5293X022 24A5293X042 24A5293X032	– – – – – – – – –	– – – – – – – – –
6	76 102 102	3 4 4	1 401, 403 402	19.1 19.1 19.1	3/4 3/4 3/4	23A5803X022 23A5803X022 23A5803X042	24A5294X022 24A5294X022 24A5294X042	23A5803X032 23A5803X032 23A5803X052	24A5294X032 24A5294X032 24A5294X052
	76 102 102	3 4 4	100, 101 405, 406 407	25.4 25.4 25.4	1 1 1	24A3028X042 24A3028X052 24A3028X062	24A5295X022 24A5295X032 24A5295X042	– – – – – – – – –	– – – – – – – – –
8	76 102 102 153 76	3 4 4 6 3	1 401, 403 402 801 100, 101	19.1 19.1 19.1 19.1 25.4	3/4 3/4 3/4 3/4 1	24A1141X092 24A1141X092 24A1141X042 24A1141X032 24A5273X022	34A4269X042 34A4269X042 34A4269X062 34A4269X022 34A4270X022	24A1141X072 24A1141X072 24A1141X082 24A1141X062 24A5273X032	34A4269X052 34A4269X052 34A4269X072 34A4269X032 34A5270X032
	102 153	4 6	404 802	25.4 25.4	1 1	24A5273X022 24A5273X022	34A4270X022 34A4270X022	24A5273X032 24A5273X032	34A4270X032 34A4270X032
	102 102 76	4 4 3	407 405, 406 100, 101	25.4 25.4 31.8	1 1 1-1/4	24A5273X042 24A5273X062 24A7259X022	34A4270X042 34A4270X062 34A7260X022	24A5273X052 24A5273X072 – – –	34A4270X052 34A4270X072 – – –
	102 153 102 102	4 6 4 4	404 802 407 405, 406	31.8 31.8 31.8 31.8	1-1/4 1-1/4 1-1/4 1-1/4	24A7259X022 24A7259X022 24A7259X032 24A7259X042	34A7260X022 34A7260X022 34A7260X032 34A7260X042	– – – – – – – – – – – –	– – – – – – – – – – – –

Key 2* Whisper Trim III Valve Plug with Two-Piece Seal Ring (NPS 6 Fisher ET only)

STEM DIAMETER		17-4PH STAINLESS STEEL (HARDENED)	316 STAINLESS STEEL	316 STAINLESS STEEL W/CoCr-A ON SEAT	316 STAINLESS STEEL W/CoCr-A ON SEAT AND GUIDE	316 STAINLESS STEEL W/CoCr-A ON SEAT AND GUIDE(1)
mm	Inches					
19.1 25.4	3/4 1	22A3259X012 22A3262X012	22A3259X022 22A3262X022	22A3260X012 22A3263X012	22A3261X012 22A3264X012	22A3267X012 22A3268X012

1. High temperature.

Key 2* Whisper Trim III Valve Plug for Spring Loaded Seal Ring (NPS 6 Fisher ET only)

STEM DIAMETER		17-4PH (HARDENED)	316 STAINLESS STEEL	316 STAINLESS STEEL W/CoCr-A ON SEAT	316 STAINLESS STEEL W/CoCr-A ON SEAT AND GUIDE
mm	Inches				
19.1 25.4	3/4 1	22A3269X012 22A3272X012	22A3269X022 22A3272X022	22A3270X012 22A3273X012	22A3271X012 22A3274X012

*Recommended spare parts

Key 3* Quick Opening Cage

VALVE SIZE, NPS		17-4PH STAINLESS STEEL (HARDENED)	316 STAINLESS STEEL		ALLOY 6
ET	EAT		Chrome Plated	ENC	
1, 1-1/4, 1-1/2 x 1, or 2 x 1	1 or 2 x 1	2U215033272	2U691146102	2U740348932	2U215039102
1-1/2 or 2-1/2 x 1-1/2	2 or 3 x 1-1/2	2U219233272	2U691846102	2U725448932	2U219239102
2 or 3 x 2	4 x 2	2U223433272	2U692146102	2U740448932	2U223439102
2-1/2 or 4 x 2-1/2	3 or 6 x 2-1/2	2U227633272	2U692446102	2U740548932	2U227639102
3	4	2U231833272	2U692746102	2U740648932	2U231839102
4	6	2U236033272	2U693046102	2U740748932	2U236039102
6	- - -	2U506333272	2U693546102	2U806948932	2U506339102
8	- - -	20A3249X012	20A4350X012	20A5469X012	20A3249X092

Key 3* Linear Cage

VALVE SIZE, NPS		17-4PH STAINLESS STEEL (HARDENED)	316 STAINLESS STEEL		ALLOY 6
ET	EAT		Chrome Plated	ENC	
1, 1-1/4, 1-1/2 x 1, or 2 x 1	1 or 2 x 1	2U215633272	2U691746102	2U741448932	2U215639102
1-1/2 or 2-1/2 x 1-1/2	2 or 3 x 1-1/2	2U219833272	2U692046102	2U741548932	2U219839102
2 or 3 x 2	4 x 2	2U224033272	2U692346102	2U741648932	2U224039102
2-1/2 or 4 x 2-1/2	3 or 6 x 2-1/2	2U228233272	2U692646102	2U741748932	2U228239102
3	4	2U232433272	2U692946102	2U741848932	2U232439102
4	6	2U236633272	2U693346102	2U741948932	2U236639102
6	- - -	2U506133272	2U693846102	2U806848932	2U506139102
8	- - -	20A3247X012	20A4349X012	20A5468X012	20A3247X092

Key 3* Equal Percentage Cage

VALVE SIZE, NPS		17-4PH STAINLESS STEEL (HARDENED)	316 STAINLESS STEEL		ALLOY 6
ET	EAT		Chrome Plated	ENC	
1, 1-1/4, 1-1/2 x 1, or 2 x 1	1 or 2 x 1	2U215333272	2U691346102	2U740848932	2U215339102
1-1/2 or 2-1/2 x 1-1/2	2 or 3 x 1-1/2	2U219533272	2U691946102	2U740948932	2U219539102
2 or 3 x 2	4 x 2	2U223733272	2U692246102	2U741048932	2U223739102
2-1/2 or 4 x 2-1/2	3 or 6 x 2-1/2	2U227933272	2U692546102	2U741148932	2U227939102
3	4	2U232133272	2U692846102	2U741248932	2U232139102
4	6	2U236333272	2U693146102	2U741348932	2U236339102
6	- - -	2U505933272	2U693746102	2U806748932	2U505939102
8	- - -	20A3245X012	20A4348X012	20A5467X012	20A3245X092

Key 3* Whisper Trim I Cage

VALVE SIZE, NPS		17-4PH STAINLESS STEEL (HARDENED)
ET	EAT	
1, 1-1/4, 1-1/2 x 1, or 2 x 1	1 or 2 x 1	2V502333272
1-1/2 or 2-1/2 x 1-1/2	2 or 3 x 1-1/2	2V502433272
2 or 3 x 2	4 x 2	2V502533272
2-1/2 or 4 x 2-1/2	3 or 6 x 2-1/2	2V502633272
3	4	2V502733272
4	6	23A8915X032
6	- - -	23A8913X032

Key 3* Whisper Trim III Cage (NPS 6 Fisher ET only)

LEVEL	416 STAINLESS STEEL	316 STAINLESS STEEL (ENC)	316 STAINLESS STEEL (Cr Cr)
A3	32A3248X012	32A3251X012	32A3336X012
B3	32A3249X012	32A3252X012	32A3337X012
C3	32A3250X012	32A3253X012	32A3338X012
D3	32A6217X012	32A6220X012	32A6741X012

*Recommended spare parts

Key 3* Cavitrol III Cage Assembly, 17-4PH stainless steel (hardened)

ET VALVE SIZE, NPS	STAGE		
	1	2	Characterized 2
1	38A1018X012	24A5558X012	24A5558X022
1-1/2	38A1019X012	24A5559X012	24A5559X022
2	38A1020X012	24A3031X032	24A3031X022
2-1/2	38A1021X012	24A5560X012	24A5560X022
3	38A1023X012	23A9453X022	23A9453X012
4	38A1025X012	23A5817X032	23A5817X022
6	38A1027X012	23A5804X012	23A5804X022
8	38A1029X012	24A3020X032	24A3020X042

Key 7* Fisher ET Valve Plug Stem, 316 stainless steel (not for Cavitrol III or Whisper Trim III cage)

VALVE SIZE, NPS		STEM DIAMETER & VSC(1) SIZE		PLAIN BONNET(3)			EXTENSION BONNET					
				Stem Length		Part Number	Style 1(4)			Style 2		
							Stem Length		Part Number	Stem Length		Part Number
		mm	Inches	mm	Inches		mm	Inches		mm	Inches	
Full Capacity	1, 1-1/4, or 1-1/2	9.5 12.7	3/8 1/2	225 300	8.875 11.8125	1U388835162 1U389035162	311 402	12.25 15.8125	1U217735162 1U217935162	405 473	15.9375 18.625	10A8823X022 1U218035162
	2	12.7 19.1	1/2 3/4	311 372	12.25 14.625	1K586935162 1U226535162	413 483	16.25 19	1U226335162 1L400135162	614 ---	24.1875 ---	1U226435162 ---
	2-1/2 or 3	12.7 19.1	1/2 3/4	321 381	12.625 15	1U230535162 1U230835162	421 502	16.5625 19.75	1U230635162 1U444635162	624 ---	24.5625 ---	1U230735162 ---
	4	12.7 19.1 25.4(1) 25.4(2)	1/2 3/4 1(1) 1(2)	321 394 464 489	12.625 15.5 18.25 19.25	1U230535162 1K587735162 1K759035162 1U217535162	421 502 --- ---	16.5625 19.75 --- ---	1U230635162 1U444635162 --- ---	624 694 --- ---	24.5625 27.3125 --- ---	1U230735162 1U240035162 --- ---
	6	19.1 25.4 31.8	3/4 1 1-1/4	403 499 508	15.875 19.625 20	1L996435162 1N704735162 1K415435162	511 630 656	20.125 24.8125 25.8125	1U507135162 1K785135162 1R562435162	699 --- ---	27.5 --- ---	1U524435162 --- ---
	8	19.1 25.4 31.8	3/4 1 1-1/4	492 614 705	19.375 24.1875 27.4375	1K588035162 1K7891X0012 1L268835162	533 614 705	21 24.1875 29.4375	1U928235162 1K7891X0012 1L268835162	--- --- ---	--- --- ---	--- --- ---
Restricted Capacity	1-1/2 x 1	9.5 12.7	3/8 1/2	241 311	9.375 12.25	1U223635162 1K586935162	324 413	12.75 16.25	1U227035162 1U226335162	418 486	16.4375 19.125	1U227235162 1U227335162
	2 x 1 or 2-1/2 x 1-1/2	12.7	1/2	300	11.8125	1U389035162	402	15.8125	1U217935162	605	23.8125	1U3893X0012
	3 x 2	12.7 19.1	1/2 3/4	311 372	12.25 14.625	1K586935162 1U226535162	413 483	16.25 19	1U226335162 1L400135162	614 ---	24.1875 ---	1U226435162 ---
	4 x 2-1/2	12.7 19.1	1/2 3/4	321 381	12.625 15	1U230535162 1U230835162	421 502	16.5625 19.75	1U230635162 1U444635162	624 681	24.5625 26.8125	1U230735162 1U232335162

1. 667 actuator.
2. 657 or 585C Series actuator.
3. Plain bonnet is standard for NPS 8 cast iron and WCC valve bodies.
4. Style 1 extension bonnet is standard for NPS 8 316 SST valve bodies.

Key 7* Whisper Trim III Valve Plug Stem, 316 stainless steel (NPS 6 Fisher ET only)

STEM DIAMETER		PLAIN BONNET	EXTENSION BONNET	
mm	Inches		Style 1	Style 2
19.1	3/4	1U294135162	1U928235162	1U6276X0012
25.4	1	1P847635162	1U627735162	– – –

*Recommended spare parts

Key 7* 1-Stage Cavitrol III Valve Plug Stem (Fisher ET only)

VALVE SIZE, NPS	TRAVEL		ACTUATOR GROUP (FROM PRECEDING TABLE)	STEM DIAMETER		316 STAINLESS STEEL	17-4PH STAINLESS STEEL STEM
	mm	Inches		mm	Inches		
1	19, 25	0.75, 1	1	12.7	1/2	1U389035162	1U3890X0062
1-1/2	19, 22	0.75, 0.875	1	12.7	1/2	1U389035162	1U3890X0062
2	26	1.125	1 1	12.7 19.1	1/2 3/4	1K586935162 1U226535162	10A8840XC82 1U226535382
2-1/2	38	1.5	1 1	12.7 19.1	1/2 3/4	1U230535162 1U230835162	1U2305X0012 1U2308X0082
3	38, 41	1.5, 1.625	1 1	12.7 19.1	1/2 3/4	1U230535162 1U230835162	1U2305X0012 1U2308X0082
4	51, 54 54 54	2, 2.125 2.125 2.125	1 402 403	19.1 19.1 19.1	3/4 3/4 3/4	1K587735162 1V142235162 1U293835162	1K5877X0022 1V1422X0042 1U2938X0062
	51, 54	2, 2.125	100 101	25.4 25.4	1 1	1U217535162 1K759035162	1U217550372 1K7590X0012
6	51 57 51 57	2 2.25 2 2.25	100 100 100 100	25.4 25.4 31.8 31.8	1 1 1-1/4 1-1/4	1P847635162 1N704735162 1K415435162 1N920935162	11A3429X252 1N7047X0012 1K415435382 1N9209X0052
	51, 57	2, 2.25	101 101	25.4 31.8	1 1-1/4	1P405135072 1K775335162	1P4051X0032 1K7753X0012
8	76, 86	3, 3.375	100, 101, 404 100, 101, 404	25.4 31.8	1 1-1/4	10A3282X012 1R489535162	10A3282X012 1R4895X0022
	86	3.375	407 407	25.4 31.8	1 1-1/4	11A3429X012 1U9886X0012	1K7783X0052 1U9886X0152

Key 7* Valve Plug Stem for Bellows Seal Bonnet, 316 Stainless Steel

VALVE SIZE, NPS		STEM DIAMETER		STEM LENGTH		PART NUMBER
ET	EAT	mm	Inches	mm	Inches	
1, 1-1/4, 1-1/2, or 1-1/2 X 1	1, 2, or 2 x 1	9.5 12.7	3/8 1/2	222 286	8.75 11.25	1R288535162 1R288835162
2, 2-1/2, 2-1/2 X 1-1/2, or 3	3 or 4	12.7	1/2	314	12.375	1U389235162
– – –	3 x 1-1/2	12.7	1/2	295	11.625	1U388935162
2 x 1 or 3 x 2	4 x 2	12.7	1/2	305	12	1U389135162
4	6	12.7 19.1	1/2 3/4	327 387	12.875 15.25	2R369335072 1K587635162
4 x 2-1/2	6 x 2-1/2	12.7 19.1	1/2 3/4	327 375	12.875 14.75	2R369335072 1U389435162
6	– – –	19.1	3/4	387	15.25	1K587635162

*Recommended spare parts

Key 9* Fisher EAT Liner

Liner Material	Valve Size, NPS	CL150 Raised Face	CL300 Raised Face	CL600 Raised Face	Socket Weld	Schedule 40 or 80 Butt Weld
416 stainless steel (hardened)	1	1V560146172	1U384246172	1V560246172	1V560146172	1V560146172
	2	1V560346172	1U384346172	1V560546172	1V560346172	1V560346172
	2 x 1	1V560646172	1U385146172	1V387646172	1V560646172	1V560646172
	3	2V561346172	2U384546172	2V561646172	- - -	2V561346172
	3 x 1-1/2	2V560946172	2U385346172	2V545946172	- - -	2V560946172
	4	2V562246172	2U384746172	2V561946172	- - -	2V562246172
	4 x 2	2V561846172	2U385546172	2V561246172	- - -	2V561846172
	6	2V563146172	2U384946172	2V562846172	- - -	2U384946172
	6 x 2-1/2	2V562646172	2U385746172	2V562346172	- - -	2U385746172
316 stainless steel	1	1V560135072	1U384235072	1V560235072	1V560135072	1V560135072
	2	1V560335072	1U384335072	1V560535072	1V560335072	1V560335072
	2 x 1	1V560635072	1U385135072	1V387635072	1V560635072	1V560635072
	3	2V561335072	2U384535072	2V561635072	- - -	2V561335072
	3 x 1-1/2	2V560935072	2U385335072	2V545935072	- - -	2V560935072
	4	2V562235072	2U384735072	2V561935072	- - -	2V562235072
	4 x 2	2V561835072	2U385535072	2V561235072	- - -	2V561835072
	6	2V563135072	2U384935072	2V562835072	- - -	2U384935072
	6 x 2-1/2	2V562635072	2U385735072	2V562335072	- - -	2U385735072

Key 9* Metal-Seat Seat Ring (not for Whisper Trim III or Cavitrol III Cage)

VALVE SIZE, NPS		416 STAINLESS STEEL (HARDENED)(1)	316 STAINLESS STEEL	R30006
ET	EAT			
1, 1-1/4, or 2 x 1	1	1U222546172	1U222535072	1U222539102
1-1/2 x 1	2 x 1	1U222046172	1U222035072	1U222039102
1-1/2 or 2-1/2 x 1-1/2	2 or 3 x 1-1/2	1U221946172	1U221935072	1U221939102
2 or 3 x 2	4 x 2	1U222646172	1U222635072	1U222639102
2-1/2 or 4 x 2-1/2	3 or 6 x 2-1/2	1U222746172	1U222735072	1U222739102
3	4	1U222846172	1U222835072	1U222839102
4	6	1U222946172	1U222933092	1U222939102
6	- - -	1U508046172	1U508033092	1U508039102
8	- - -	20A3260X012	20A3260X022	20A3260X152

1. 410 stainless steel (CA15) is used for NPS 6 and 8 full-sized and restricted-trim valves.

Key 9* Cavitrol III Seat Ring (Fisher ET only)

VALVE SIZE, NPS	1-STAGE CAGE		2-STAGE CAGE	
	17-4PH Stainless Steel	Alloy 6 (Cast)	17-4PH Stainless Steel	316 Stainless Steel w/CoCr-A Seat & Bore
1	23A7567X012	23A7567X022	24A5231X012	24A5239X012
1-1/2	23A7568X012	23A7568X022	24A5232X012	24A5240X012
2	23A7569X012	23A7569X022	24A3039X012	24A5241X012
2-1/2	24A1586X012	24A1586X022	24A5233X012	24A5242X012
3	24A3016X012	24A3016X022	23A9450X012	24A5243X012
4	24A1135X012	24A1135X022	23A5813X012	24A5244X012
6	23A5820X032	23A5820X012	23A5802X022	24A5245X012
8	23A9445X022	23A9445X032	24A3021X022	24A5246X012

Key 9* Whisper Trim III Seat Ring (NPS 6 Fisher ET only)

410 Stainless Steel	316 Stainless Steel	316 Stainless Steel w/ CoCr-A Seat
21A9794X012	21A9794X022	21A9795X012

*Recommended spare parts

Gasket Descriptions

KEY NUMBER	DESCRIPTION	MATERIAL FGM -198° to 593°C (-325° to 1100°F)
10[1]	Bonnet Gasket	Graphite/S31600
11	Cage Gasket	
13	Seat Ring or Liner Gasket	
14 or 20	Adapter Gasket	
12	Spiral-Wound Gasket	N06600/Graphite
27 or 51	Shim	S31600 (316 SST)

1. 2 req'd for 2-stage Cavitrol III cage.

Keys 10*, 11*, 12*, 13*, 14*, 20*, 27*, and 51* Gaskets and Shims

Valve Size, nPs		Key Number	To 593°C (To 1100°F)	VALVE SIZE, NPS		KEY NUMBER	To 593°C (To 1100°F)
ET	EAT			ET	EAT		
1 or 1-1/4	1	Set 10 12 13 27 or 51	RGASKETX162 1R2859X0042 1R286099442 1R2862X0062 16A1936X012	3	4	Set 10 12 13 27 or 51	RGASKETX202 1R3484X0042 1R348299442 1R3481X0052 16A1940X012
1-1/2	2	Set 10 12 13 27 or 51	RGASKETX172 1R3101X0032 1R309999442 1R3098X0052 16A1937X012	3 x 2	4 x 2	Set 10 11 12 13 14 27 or 51	RGASKETX272 1R3484X0042 1R3298X0032 1R329799442 1R3296X0042 1R3481X0052 16A1938X012
1-1/2 x 1	2 x 1	Set 10 11 12 13 20 27 or 51	RGASKETX242 1R3101X0032 1R2861X0042 1R286099442 1R3098X0052 1U2152X0042 16A1936X012	4	6	Set 10 12 13 27 or 51	RGASKETX212 1R3724X0042 1R372299442 1J5047X0062 16A1941X012
2	- - -	Set 10 12 13 51	RGASKETX182 1R3299X0042 1R329799442 1R3296X0042 16A1938X012	4 x 2-1/2	6 x 2-1/2	Set 10 11 12 13 14 27 or 51	RGASKETX282 1R3724X0042 1R3846X0042 1R384599442 1R3844X0052 1J5047X0062 16A1939X012
2 x 1	- - -	Set 10 11 12 13 14 51	RGASKETX252 1R3299X0042 1R2861X0042 1R286099442 1R2862X0062 1R3296X0042 16A1936X012	6	- - -	Set[1] 10 12 13 51	RGASKETX222 1U5081X0052 1U508599442 1U5086X0032 16A1942X012
2-1/2	3	Set 10 12 13 27 or 51	RGASKETX192 1R3847X0032 1R384599442 1R3844X0052 16A1939X012	8	- - -	Set 10 13	RGASKETX232 10A3265X112 10A3266X082
2-1/2 x1-1/2	3 x 1-1/2	Set 10 11 12 13 14 27 or 51	RGASKETX262 1R3847X0032 1R3100X0032 1R309999442 1R3098X0052 1R3844X0052 16A1937X012				

1. Whisper Trim III construction requires 2 bonnet gaskets (key 10) so order a set plus 1 extra bonnet gasket for that construction.

*Recommended spare parts

Key 21*, 22*, and 23* PTFE Seat Disk Retainer, Disk Seat, and Disk

VALVE SIZE, NPS		KEY 21 DISK RETAINER, 316 STAINLESS STEEL	KEY 22 DISK SEAT		KEY 23 DISK, PTFE -73 TO 204°C (-100 TO 400°F)
ET	EAT		316 Stainless Steel	Alloy 6 (Cast)	
1, 1-1/4, or 2 x 1	1	1V710035072	1V710235072	1V710239102	1V710106242
1-1/2 or 2-1/2 x 1-1/2	2 or 3 x 1-1/2	1V710335072	1V710535072	1V710539102	1V710406242
1-1/2 x 1	2 x 1	1V712135072	1V712235072	1V712239102	1V710106242
2 or 3 x 2	4 x 2	1V710835072	1V710635072	1V710639102	1V710706242
2-1/2 or 4 x 2-1/2	3 or 6 x 2-1/2	1V710935072	1V711135072	1V711139102	1V711006242
3	4	1V711235072	1V711435072	1V711439102	1V711306242
4	6	1V711533092	1V711733092	1V711739102	1V711606242
6 All except Whisper Trim III cage	– – –	1V711833092	1V712033092	1V7120X0012	1V711906242
6 Whisper Trim III cage	– – –	23A4937X012	23A4938X012	– – –	13A4936X012
8	– – –	10A4466X012	20A4467X012	20A4467X022	20A4468X012

Key 27* Retaining Ring for Spring-Loaded Seal Ring, 302 SST

VALVE SIZE, NPS		PART NUMBER
ET	EAT	
1, 1-1/4 1-1/2 x 1, or 2 x 1	1 or 2 x 1	10A4211X012
1-1/2 or 2-1/2 x 1-1/2	2 or 3 x 1-1/2	10A4220X012
2 or 3 x 2	4 x 2	10A4210X012
2-1/2 or 4 x 2-1/2	3 or 6 x 2-1/2	10A4219X012
3	4	10A5350X012
4	6	10A4225X012
6 (Whisper Trim III only)	– – –	10A5410X012

Key 27* Cavitrol III Retaining Ring for NPS 1 through 6 Fisher ET only, 302 SST

VALVE SIZE, NPS	1-STAGE CAGE	2-STAGE CAGE
1	10A4211X012	11A3405X012
1-1/2	10A4220X012	10A4211X012
2	10A4210X012	10A4220X012
2-1/2	10A4219X012	10A4210X012
3	10A5350X012	10A4219X012
4	10A4225X012	10A4219X012
6	None required	10A5410X012

Key 24* Seal Ring (Fisher EAT)
Key 28* Seal Ring (Fisher ET) (not for Cavitrol III or Whisper Trim III Construction)

VALVE SIZE, NPS		STANDARD, CARBON FILLED PTFE	SPRING-LOADED
ET	EAT		PTFE -73 to 232°C (-100 to 450°F)
1, 1-1/4, 1-1/2 x 1, or 2 x 1	1 or 2 x 1	1V659105092	10A4207X012
1-1/2 or 2-1/2 x 1-1/2	2 or 3 x 1-1/2	1V659305092	10A4216X012
2 or 3 x 2	4 x 2	1V550805092	10A4206X012
2-1/2 or 4 x 2-1/2	3 x 2 or 6 x 2-1/2	1V659505092	10A4215X012
3	4	1V659705092	10A5351X022
4	6	1V659905092	10A4223X012
6	– – –	1V660105092	10A2643X022
8	– – –	– – –	10A3261X012

*Recommended spare parts

Key 28* Cavitrol III Seal Ring for Fisher ET only, spring loaded PTFE

VALVE SIZE, NPS	1-STAGE CAGE	2-STAGE CAGE
1	10A4207X012	11A3407X042
1-1/2	10A4216X012	10A4207X012
2	10A4206X012	10A4216X012
2-1/2	10A4215X012	10A4206X012
3	10A5351X022	10A4215X012
4	10A4223X012	10A4215X012
6	10A2643X022	10A5411X022
8	10A3261X012	10A2643X022

Key 28* Whisper Trim III Seal (NPS 6 Fisher ET only)

CARBON FILLED PTFE	SPRING LOADED PTFE
11A9729X012	10A5411X022

Key 25* Backup Ring (Fisher EAT)
Key 29* Backup Ring (Fisher ET) (not for Cavitrol III or NPS 8 ET)

VALVE SIZE, NPS			STANDARD CONSTRUCTION			SPRING LOADED SEAL CONSTRUCTION	
ET		EAT	Nitrile -34 to 93°C (-30 to 200°F)	Fluorocarbon(1) -18 to 204°C (-0 to 400°F)	Ethylene Propylene -40 to 232°C (-40 to 450°F)	416 Stainless Steel	316 Stainless Steel
1, 1-1/4, 1-1/2 x 1, or 2 x 1		1 or 2 x 1	1V659003052	1V659005292	1V6590X0042	10A4209X012	10A4209X022
1-1/2 or 2-1/2 x 1-1/2		2 or 3 x 1-1/2	1V659203052	1V659205292	1V6592X0032	10A4218X022	10A4218X012
2 or 3 x 2		4 x 2	1V550703052	1V550705292	1V5507X0042	10A4208X012	10A4208X022
2-1/2 or 4 x 2-1/2		3 or 6 x 2-1/2	1V659403052	1V659405292	1V6594X0032	10A4217X012	10A4217X022
3		4	1V659603052	1V659605292	1V6596X0032	10A5349X012	10A5349X022
4		6	1V659803052	1V659805292	1V6598X0022	10A4224X012	10A4224X022
6	All except Whisper Trim III cage	– – –	1V660003052	1V660005292	1V6600X0022	– – –	– – –
	Whisper Trim III cage	– – –	11A9728X022	11A9728X012	11A9728X042	12A3332X012	12A3332X022

1. Not for use with steam or ammonia. Not recommended for water above 82°C (180°F).

Key 29* Cavitrol III Backup Ring, 416 Stainless Steel (not for NPS 8 Fisher ET)

VALVE SIZE, NPS	1-STAGE CAGE	2-STAGE CAGE
1	10A4209X012	11A3404X012
1-1/2	10A4218X022	10A4209X022
2	10A4208X012	10A4218X022
2-1/2	10A4217X012	10A4208X012
3	10A5349X012	10A4217X012
4	10A4224X012	10A4217X012
6	None required	10A5409X012

*Recommended spare parts

Keys 3*, 9*, 2*, 28*, 63*, 29*, and 27* TSO Trim Parts for Fisher ET Valves

VALVE SIZE, NPS	PORT, INCH	TRAVEL, INCH	TRIM	STEM DIAMETER		ACTUATOR GROUP	CHARAC-TERISTIC	KEY 3	KEY 3	KEY 9	KEY 2
				mm	Inch			Cage Full 2-Stage	Cage Characterized 2-Stage	Seat Ring	Plug / Stem Assembly
3	2.6875	3	810 816	12.7	1/2	1 & 400	Cavitrol III	23A9453X022	23A9453X012	28B1302X012 28B1303X012	28B1306X012 28B1306X022
			810 816	19.1	3/4	100 & 101		23A9453X022	23A9453X012	28B1302X012 28B1303X012	27B6604X112 27B6604X122
4	2.6875	3	810	19.1	3/4	1, 402, 403	Cavitrol III	23A5817X032	23A5817X022	28B1307X012	28B1310X012
		4				401, 403					
		4				402					28B1310X022

VALVE SIZE, NPS	PORT, INCH	TRAVEL, INCH	TRIM	STEM DIAMETER		ACTUATOR GROUP	CHARAC-TERISTIC	KEY 28	KEY 63	KEY 29	KEY 27
				mm	Inch			Seal Ring	Anti-Extrusion Ring	Back-Up Ring	Retaining Ring
3	2.6875	3	810 816	12.7	1/2	1 & 400	Cavitrol III	10A4215X102	22B2617X012	10A4217X012 10A4217X022	10A4219X012 10A4219X082
			810 816	19.1	3/4	100 & 101				10A4217X012 10A4217X022	10A4219X012 10A4219X052
4	2.6875	3	810	19.1	3/4	1, 402, 403	Cavitrol III	10A4215X102	22B2617X012	10A4217X012	10A4219X012
		4				401, 403					
		4				402					

Keys 3*, 7*, 24*, 63*, 25*, and 27* TSO Trim Parts for Fisher ET and EAT Valves(1)

VALVE SIZE, NPS		PORT	TRAVEL	STEM DIAMETER		CHARAC-TERISTIC	KEY 3	KEY 7	KEY 24	KEY 63	KEY 25	KEY 27
ET	EAT	Inch	Inch	mm	Inch		Cage	Plug/Stem Assembly	Seal Ring	Anti-Extrusion Ring	Back-Up Ring	Retaining Ring
3	4	3.25	1.5	12.7	1/2	Linear Equal % Quick Open	2U232433272 2U232133272 2U231833272	27B9567X012	10A5351X112	23B6126X012	10A5349X012	10A5350X012
4	6	4.1875	2	19.1	3/4	Linear Equal % Quick Open	2U236633272 2U236333272 2U236033272	38B0282X012	10A4223X142	21B9341X012	10A4224X012	10A4225X012

1. Trim is 812.

Key 9* TSO Trim Parts for Fisher ET and EAT Valves(1)

VALVE SIZE, NPS		PORT, INCH	KEY 9				
			Seat Ring	Seat and Liner			
ET	EAT			CL150 Raised Face	CL300 Raised Face	CL600 Raised Face	Schedule 40 or 80 ButtWeld
3	4	3.25	37B9563X012	38B0273X012	38B0273X022	38B0273X032	38B0273X012
4	6	4.1875	38B0276X012	38B0277X012	38B0276X022	38B0276X032	38B0276X022

1. Trim is 812.

*Recommended spare parts

Keys 63*, 28*, 29*, 27*, 2*, and 9* Fisher ET Full Capacity Trim above 232°C (450°F) using PEEK Anti-Extrusion Rings

VALVE SIZE, NPS	PORT	Use w/ Cage/See Footnote	KEY 63 Anti-Extrusion Ring	KEY 28 Seal Ring	KEY 29 Back-Up Ring	KEY 27 Retaining Ring	KEY 2 Plug(1)	STEM CONN DIAMETER, INCHES	KEY 9 Seat Ring(1)
1	1.3125	A	23B6125X012	10A4207X032	10A4209X012	10A4211X012	33B6091X012	0.375	21B3686X012
1-1/2	1.875	A	22B4694X012	10A4216X032	10A4218X022	10A4220X012	33B6093X012 33B6094X012	0.375 0.5	21B6970X012
2	2.3125	A	21B9340X012	10A4206X032	10A4208X012	10A4210X012	33B6097X012 33B6098X012	0.5 0.75	10B8254X012
2-1/2	2.875	A	22B2617X012	10A4215X032	10A4217X012	10A4219X012	33B6109X012 33B6110X012	0.5 0.75	21B3687X012
3	3.4375	A	23B6126X012	10A5351X062	10A5349X012	10A5350X012	33B6105X012 33B6106X012	0.5 0.75	23B6127X012
4	4.375	A	21B9341X012	10A4223X032	10A4224X012	10A4225X012	33B6101X012 33B6102X012 33B6111X012	0.5 0.75 1	23B6128X012
6	7	A	22B5998X012	10A2643X032	12B5997X012	14A4652X012	33B6115X012 33B6116X012	0.75 1	29A9703X012
6	5.375	C	21B9342X012	10A5411X032	12A3332X012	10A5410X012	33B6134X012 33B6136X012	0.75 1	33B6146X012
8	8	B	22B9203X012	10A3261X032	11B8325X022	11B8322X012	33B6119X012 33B6120X012 33B6121X012	0.75 1 1.25	29A9704X012

A—Cages - Quick opening, equal percentage, linear, Whisper I.
B—Cages - Equal percentage, linear - plug & seat ring material CA15 (cast 410).
C—Cages - Whisper III - plug material 17-4PH H900 - seat ring material forged F6A (SST).
1. Seat rings with wide bevel seat and plugs with radius seat.

Keys 63*, 28*, 29*, 27*, 2*, and 9* Fisher ET Restricted Trim above 232°C (450°F) using PEEK Anti-Extrusion Rings

VALVE SIZE, NPS	PORT	KEY 63 Anti-Extrusion Ring	KEY 28 Seal Ring	KEY 29 Back-Up Ring	KEY 27 Retaining Ring	KEY 2 Plug(1)	STEM CONN DIAMETER, INCHES	KEY 9 Seat Ring(1)
1-1/2 x 1	1.3125	23B6125X012	10A4207X032	10A4209X012	10A4211X012	33B6091X012	0.375	22B3550X012
2-1/2 x 1-1/2	1.875	22B4694X012	10A4216X032	10A4218X022	10A4220X012	33B6094X012	0.5	21B6970X012
3 x 2	2.3125	21B9340X012	10A4206X032	10A4208X012	10A4210X012	33B6097X012 33B6098X012	0.5 0.75	10B8254X012
4 x 2-1/2	2.875	22B2617X012	10A4215X032	10A4217X012	10A4219X012	33B6109X012 33B6110X012	0.5 0.75	21B3687X012

Cages - Quick opening, equal percentage, linear, Whisper I.
1. Seat rings with wide bevel seat and plugs with radius seat.

*Recommended spare parts

Fisher, easy-e, Cavitrol, ENVIRO-SEAL, WhisperFlo, and Whisper Trim are marks owned by one of the companies in the Emerson Process Management business division of Emerson Electric Co. Emerson Process Management, Emerson, and the Emerson logo are trademarks and service marks of Emerson Electric Co. All other marks are the property of their respective owners.

The contents of this publication are presented for informational purposes only, and while every effort has been made to ensure their accuracy, they are not to be construed as warranties or guarantees, express or implied, regarding the products or services described herein or their use or applicability. All sales are governed by our terms and conditions, which are available upon request. We reserve the right to modify or improve the designs or specifications of such products at any time without notice. Neither Emerson, Emerson Process Management, nor any of their affiliated entities assumes responsibility for the selection, use or maintenance of any product. Responsibility for proper selection, use, and maintenance of any product remains solely with the purchaser and end user.

Emerson Process Management
Marshalltown, Iowa 50158 USA
Sorocaba, 18087 Brazil
Chatham, Kent ME4 4QZ UK
Dubai, United Arab Emirates
Singapore 128461 Singapore

www.Fisher.com

©Fisher Controls International LLC 1973, 2010; All Rights Reserved